SW79-6 SERIES

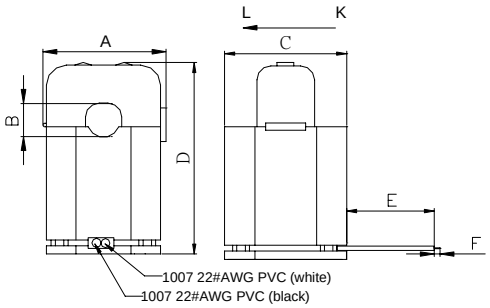

Test Circuit

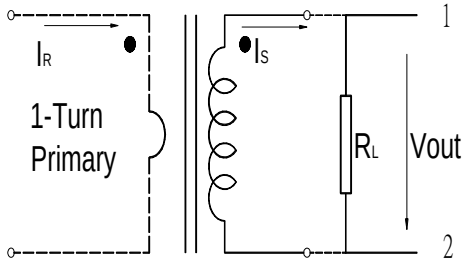

Electrical Characteristic / MECHANICAL DIMENSION

Part Number	I_R (A)	Vout (V)	Acc.Class (%)	Imin (A)	Imax (A)	R_L (Ω)	f (%)	δ (')	DCR (Ω)	A(max)	B(max)	C(max)	D((max)	E(±3)	F(±1)
										mm / inch					
SW79-6-855-R	0.03~30A	0.977	3	0.03	60	100	-2.200	250	534	25.51 / 1.004	10.75 / 0.423	26.51 / 1.044	39.15 / 1.541	180 / 7.086	6.0 / 0.236

SW79-6-855-R

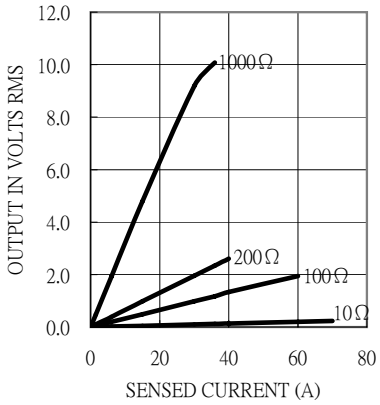

Remark:
1. Frequency band :50Hz~60Hz.
2. Operating temperature: -25℃~80℃.
3. ALL current ,voltage reffer to rms value.
4. Product comply with RoHS requirements.
5. Hi-POT: 2500V $_{RMS}$/1min between windings.
6. Formula of 2nd output :Vout=I $_R$*R_L / N(Turns).
7. Product parts such as: Wire,Epoxy,Case/House,Lead, and etc. are in accordance with UL requirements.

Definition:
I_R : Rated Current
R_L : Load resistance.
Vout: Output voltage.
DCR: Sendary Winding DC Resistance.
Imin: Min. detecting current which remains lineality.
Imax: Max. detecting current which remains lineality.
f(%) : Ratio error.
δ(') : Phase shift.
Acc.Class : Accuracy class.

PEWATRON
a member of the Angst + Pfister Group

We are here for you. Addresses and Contacts

Sales Switzerland

Postcode 3000 – 9999
Liechtenstein

Matthias Rüegg
Ruhbergstrasse 32
CH-9230 Flawil

Phone + 41 44 877 35 18
Mobile + 41 76 491 66 66
Fax + 41 44 877 35 19

matthias.rueegg@pewatron.com

Postcode 1000 – 2999

Raffael Favaretto
Route d'Oron 124
CH-1673 Promasens

Phone + 41 44 877 35 22
Mobile + 41 76 444 63 14
Fax + 41 44 877 35 23

raffael.favaretto@pewatron.com

Sales Germany

Postcode 60000 – 79999

Dieter Hirthe
Mühlweg 23
D-71554 Weissach i.T.

Phone + 49 719 149 60 58
Mobile + 49 163 762 74 30
Fax + 49 719 193 31 88

dieter.hirthe@pewatron.com

Postcode 10000 – 59999
Postcode 80000 – 99999

Kurt Stritzelberger
Neumarkter Str. 86a
D-81673 Munich

Phone + 49 89 260 38 47
Mobile + 49 171 803 41 35
Fax + 49 89 43 10 91 91

kurt.stritzelberger@pewatron.com

Key Accounts
Aerospace and Defence

Claus Wübbena
Vogelkamp 26
D-26655 Westerstede

Phone + 49 4488 5204 614
Mobile + 49 173 9700 691
Fax + 49 4488 5204 616

claus.wuebbena@pewatron.com

Sales Austria

Kurt Stritzelberger
Neumarkter Str. 86a
D-81673 Munich

Phone + 49 89 260 38 47
Mobile + 49 17 18 03 41 35
Fax + 49 89 43 10 91 91

kurt.stritzelberger@pewatron.com

Sales Other Countries / Product Management

Sensors

Physical Sensors
Data Acquisition

Peter Felder
Phone + 41 44 877 35 05
peter.felder@pewatron.com

Geometrical Sensors

Eric Letsch
Phone + 41 44 877 35 14
eric.letsch@pewatron.com

Power Supplies

DC-DC Converters
Switching Power Supplies
DC-AC Inverters

Sebastiano Leggio
Phone + 41 44 877 35 06
sebastiano.leggio@pewatron.com

E-Components

Current Sensors
Man Machine Interface
Measurement Probes

Sebastiano Leggio
Phone + 41 44 877 35 06
sebastiano.leggio@pewatron.com

PEWATRON AG
Thurgauerstrasse 66
CH-8052 Zurich

Phone + 41 44 877 35 00
Fax + 41 44 877 35 25

www.pewatron.com
info@pewatron.com