Hall Current Sensor YZ500..301-THX

I_{PN}=50..300A

For the electronic measurement of currents:DC,AC,pulsed,mixed, with a galvanic isolation between the primary(high power) circuit and the secondary(electronic) circuit.

LEAD FREE

RoHS COMPLIANT

● *Operating performance* *(AT =25 ℃)*

Performance \ Model		YZ500 THX	YZ750 THX	YZ101 THX	YZ201 THX	YZ301 THX
Primary nominal r.m.s. current	I_{PN} (A)	50	75	100	200	300
Primary current measuring range	I_P (A)	0~±100	0~±150	0~±200	0~±400	0~±600
Supply voltage	V_{CC}	±15V (±5%)				
Output voltage	V_{OUT}	4V ±1% @±I_{PN}, R_L= 10KΩ				
Current consumption	I_C	≦±20mA @ ±I_{PN}				
Offset voltage	V_O	＜±0.03V @I_P=0,T_A=25℃				
Thermal drift of Vo	V_{OT}	≦±1mV/℃	≦±0.5mV/℃			
Thermal drift of V_{OUT}	$TC\varepsilon_G$	＜±0.04%/℃				
Response time	t_r	＜5μs				
Linearity	ε_L	≦±1% @0~±I_{PN}				
Accuracy	X	±1 @I_{PN}				
Hysteresis offset voltage	V_{OH}	≦±20mV @±3I_{PN}→0				
Isolation voltage	V_d	3KV @50(60)HZ/1min				
Frequency bandwidth	f	0~50KHz				

● *General data*

Operating temperature	T_O	-25～+85℃
Storage temperature	T_S	-40～+100℃
Mass	m	26g
Note		Insulated plastic case recognized according to UL 94-V0

● *Applications*

- ◆AC variable speed drives
- ◆Battery supplied applications
- ◆Uninterruptible Power Supplies(UPS)
- ◆Static converters for DC motor drives
- ◆Switched Mode Power Supplies(SMPS)
- ◆Power supplies for welding applications.

● *Advantages*

- ◆Low insertion losses
- ◆Easy to mount with automatic handling system
- ◆Small size and space saving
- ◆Only one design for wide current ratings range
- ◆High immunity to external interference

● Connection

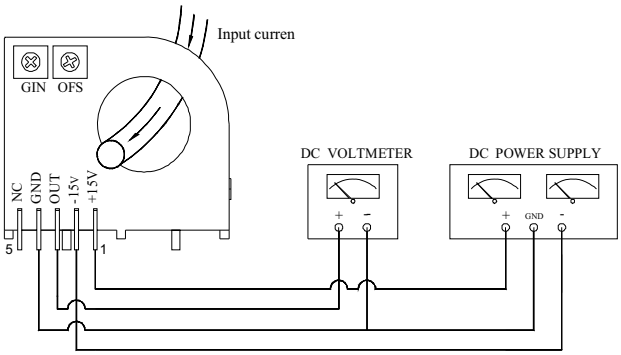

● Dimensions (unit: mm/inch)

Front View

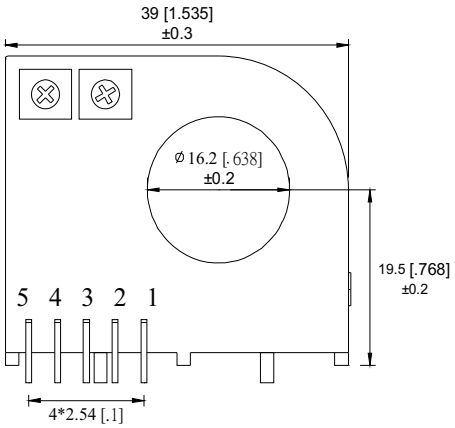

Right View

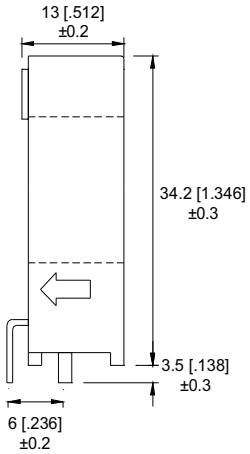

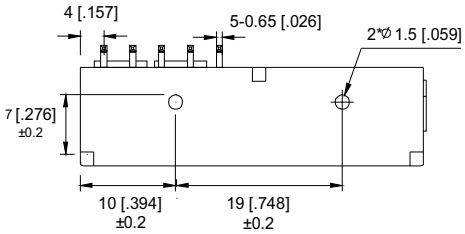

Bottom View

Secondary terminals	
terminal 1	+15V
terminal 2	-15V
terminal 3	OUTPUT
terminal 4	GND
terminal 5	NC

● Remarks

◆V_{OUT} is positive when I_P flows in the direction of the arrow.

◆Temperature of the primary conductor should not exceed 100℃.

◆These are standard models. For different versions(supply voltages, secondary connections, unidirectional measurements, operating temperatures, etc.)please contact us.

PEWATRON
a member of the Angst + Pfister Group

We are here for you. Addresses and Contacts

Sales Switzerland

Postcode 3000 – 9999
Liechtenstein

Matthias Rüegg
Ruhbergstrasse 32
CH-9230 Flawil

Phone + 41 44 877 35 18
Mobile + 41 76 491 66 66
Fax + 41 44 877 35 19

matthias.rueegg@pewatron.com

Postcode 1000 – 2999

Raffael Favaretto
Route d'Oron 124
CH-1673 Promasens

Phone + 41 44 877 35 22
Mobile + 41 76 444 63 14
Fax + 41 44 877 35 23

raffael.favaretto@pewatron.com

Sales Germany

Postcode 60000 – 79999

Dieter Hirthe
Mühlweg 23
D-71554 Weissach i.T.

Phone + 49 719 149 60 58
Mobile + 49 163 762 74 30
Fax + 49 719 193 31 88

dieter.hirthe@pewatron.com

Postcode 10000 – 59999
Postcode 80000 – 99999

Kurt Stritzelberger
Neumarkter Str. 86a
D-81673 Munich

Phone + 49 89 260 38 47
Mobile + 49 171 803 41 35
Fax + 49 89 43 10 91 91

kurt.stritzelberger@pewatron.com

Key Accounts
Aerospace and Defence

Claus Wübbena
Vogelkamp 26
D-26655 Westerstede

Phone + 49 4488 5204 614
Mobile + 49 173 9700 691
Fax + 49 4488 5204 616

claus.wuebbena@pewatron.com

Sales Austria

Kurt Stritzelberger
Neumarkter Str. 86a
D-81673 Munich

Phone + 49 89 260 38 47
Mobile + 49 17 18 03 41 35
Fax + 49 89 43 10 91 91

kurt.stritzelberger@pewatron.com

Sales Other Countries / Product Management

Sensors

Physical Sensors
Data Acquisition

Peter Felder
Phone + 41 44 877 35 05
peter.felder@pewatron.com

Geometrical Sensors

Eric Letsch
Phone + 41 44 877 35 14
eric.letsch@pewatron.com

Power Supplies

DC-DC Converters
Switching Power Supplies
DC-AC Inverters

Sebastiano Leggio
Phone + 41 44 877 35 06
sebastiano.leggio@pewatron.com

E-Components

Current Sensors
Man Machine Interface
Measurement Probes

Sebastiano Leggio
Phone + 41 44 877 35 06
sebastiano.leggio@pewatron.com

PEWATRON AG
Thurgauerstrasse 66
CH-8052 Zurich

Phone + 41 44 877 35 00
Fax + 41 44 877 35 25

www.pewatron.com
info@pewatron.com