Hall Current Sensor YM055-HHX

I_{PN}=50A

For the electronic measurement of currents:DC,AC,pulsed,mixed with a galvanic isolation between the primary(high power) circuit and the secondary(electronic) circuit.

RoHS COMPLIANT

● Operating performances (AT =25℃)

Primary nominal r.m.s. current	I_{PN}	50						A
Primary current measuring range	I_P	0~±70						A
Secondary nominal r.m.s. current	I_{SN}	50						mA
Measuring resistance	R_M			T_A=70℃ R_M	T_A=70℃ R_M	$R_{M\ min}$	T_A=85℃ R_M	
		with ±12V	@ ±50A_{max}	10	100	60	95	Ω
			@ ±70A_{max}	10	50	60[1)]	60[1)]	Ω
		with ±15V	@ ±50A_{max}	50	160	135	155	Ω
			@ ±70A_{max}	50	90	135[2)]	135[2)]	Ω
Conversion tatio	K_N	1:1000						
Supply voltage	V_{CC}	±12~15 (±5%)						V
Current consumption	I_C	10(@±15V)+I_S						mA
Linearity	ε_L	≦±0.1 @0~±I_{PN}						%
Accuracy	X	±0.65@I_{PN},V_C=±15V,T_A=25℃,						%
Offset current	I_O	＜±0.2 @I_P=0,T_A=25℃						mA
Thermal drift of Io	I_{OT}	≦±0.6 (type ±0.1)						mA/℃
Response time	t_r	＜1						μs
di/dt accurately followed	di/dt	200						A/μs
Hysteresis offset current	I_{OH}	≦±0.3 @±3I_{PN}→0						mA
Isolation voltage	V_d	2.5 @50(60)HZ/1min						KV
Frequency bandwidth	f	0~200						KHz

● General data

Operating temperature	T_O	-25～+85	℃
Storage temperature	T_S	-40～+100	℃
Mass	m	18	g

● Applications

- ◆AC variable speed drives and servo motor drives
- ◆Static converters for DC motor drives
- ◆Battery supplied applications
- ◆Switched Mode Power Supplies(SMPS)
- ◆Uninterruptible Power Supplies(UPS)
- ◆Power supplies for welding applications

● Advantages

- ◆Excellent accuracy
- ◆Very good linearity
- ◆Low temperature drift
- ◆Optimized response time
- ◆Wide frequency bandwidth
- ◆High immunity to external interference
- ◆Very low insertion losses
- ◆Current overload capability

Note: 1)Measuring range limited to ±60A_{MAX} 2)Measuring range limited to ±55A_{MAX}

● Connection

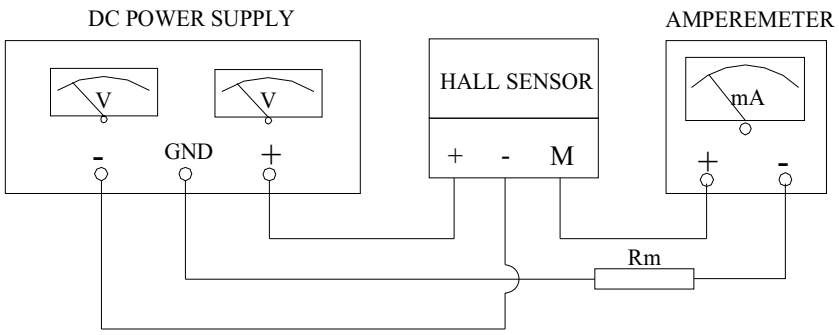

● Dimensions (Unit:mm/inch)

Front View

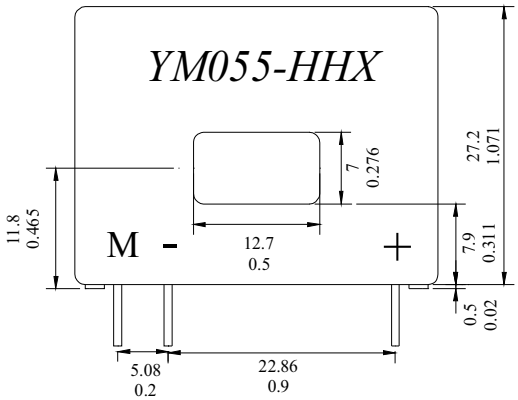

Right View

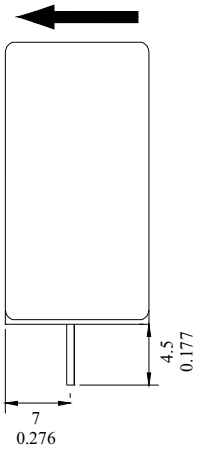

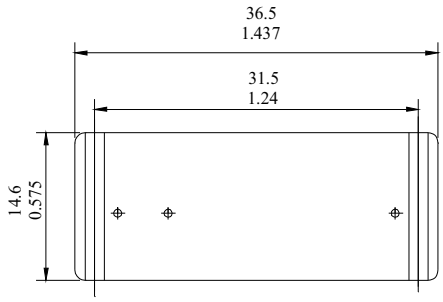

Bottom View

Secondary terminals	
Terminal +	+12...15V
Terminal -	-12...15V
Terminal M	measure

Tol: ±0.3mm/0.012inch

● Remarks

- ◆I_{OUT} is positive when I_P flows in the direction of the arrow.
- ◆Temperature of the primary conductor should not exceed 100℃.
- ◆These are standard models. For different versions(supply voltages, secondary connections unidirectional measurements, operating temperatures, etc.)please contact us.

PEWATRON
a member of the Angst + Pfister Group

We are here for you. Addresses and Contacts

Sales Switzerland

Postcode 3000 – 9999
Liechtenstein

Matthias Rüegg
Ruhbergstrasse 32
CH-9230 Flawil

Phone + 41 44 877 35 18
Mobile + 41 76 491 66 66
Fax + 41 44 877 35 19

matthias.rueegg@pewatron.com

Postcode 1000 – 2999

Raffael Favaretto
Route d'Oron 124
CH-1673 Promasens

Phone + 41 44 877 35 22
Mobile + 41 76 444 63 14
Fax + 41 44 877 35 23

raffael.favaretto@pewatron.com

Sales Germany

Postcode 60000 – 79999

Dieter Hirthe
Mühlweg 23
D-71554 Weissach i.T.

Phone + 49 719 149 60 58
Mobile + 49 163 762 74 30
Fax + 49 719 193 31 88

dieter.hirthe@pewatron.com

Postcode 10000 – 59999
Postcode 80000 – 99999

Kurt Stritzelberger
Neumarkter Str. 86a
D-81673 Munich

Phone + 49 89 260 38 47
Mobile + 49 171 803 41 35
Fax + 49 89 43 10 91 91

kurt.stritzelberger@pewatron.com

Key Accounts
Aerospace and Defence

Claus Wübbena
Vogelkamp 26
D-26655 Westerstede

Phone + 49 4488 5204 614
Mobile + 49 173 9700 691
Fax + 49 4488 5204 616

claus.wuebbena@pewatron.com

Sales Austria

Kurt Stritzelberger
Neumarkter Str. 86a
D-81673 Munich

Phone + 49 89 260 38 47
Mobile + 49 17 18 03 41 35
Fax + 49 89 43 10 91 91

kurt.stritzelberger@pewatron.com

Sales Other Countries / Product Management

Sensors

Physical Sensors
Data Acquisition

Peter Felder
Phone + 41 44 877 35 05
peter.felder@pewatron.com

Geometrical Sensors

Eric Letsch
Phone + 41 44 877 35 14
eric.letsch@pewatron.com

Power Supplies

DC-DC Converters
Switching Power Supplies
DC-AC Inverters

Sebastiano Leggio
Phone + 41 44 877 35 06
sebastiano.leggio@pewatron.com

E-Components

Current Sensors
Man Machine Interface
Measurement Probes

Sebastiano Leggio
Phone + 41 44 877 35 06
sebastiano.leggio@pewatron.com

PEWATRON AG
Thurgauerstrasse 66
CH-8052 Zurich

Phone + 41 44 877 35 00
Fax + 41 44 877 35 25

www.pewatron.com
info@pewatron.com