Hall Current Sensor **YL656..856-HHX** I_{PN}=100..300A

For the electronic measurement of currents:DC,AC,pulsed,mixed, with a galvanic isolation between the primary(high power) circuit and the secondary(electronic) circuit.

RoHS COMPLIANT

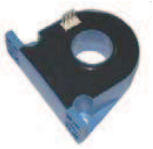

● Operating performance (AT =25℃)

Performance \ Model		YL656-HHX	YL756-HHX	YL856-HHX
Primary nominal r.m.s. current	I_{PN} (A)	100	200	300
Primary current measuring range	I_P (A)	0~±150	0~±300	0~±500
Secondary nominal r.m.s. current	I_{SN}	50mA	100mA	150mA
Measuring resistance	R_M	with ±12V R_{Mmin} R_{Mmax}	R_{Mmin} R_{Mmax}	R_{Mmin} R_{Mmax}
		@±100Amax 0 136Ω	@±200Amax 0 50Ω	@±300Amax 0 30Ω
		@±150Amax 0 74Ω	@±300Amax 0 26Ω	@±500Amax 0 7Ω
		with ±15V		
		@±100Amax 0 175Ω	@±200Amax 0 73Ω	@±300Amax 0 43Ω
		@±150Amax 0 106Ω	@±300Amax 0 40Ω	@±500Amax 0 17Ω
Conversion ratio	K_N	1:2000		
Supply voltage	V_{CC}	±12~15V (±5%)		
Current consumption	I_C	28mA(@±12V)+I_S		
Linearity	ε_L	≦±0.1% @0~±I_{PN}		
Accuracy @I_{PN},V_C= ±15V T =25℃	X	±0.6%	±0.5%	±0.5%
Offset current @I_P=0,TA=25℃	I_O	＜±0.15mA	＜±0.2mA	＜±0.2mA
Thermal drift of Io	I_{OT}	≦±0.64mA/℃ (type ±0.2)		
Response time	t_r			
di/dt accurately followed	di/dt			
Hysteresis offset current	I_{OH}	≦±0.1mA @±3I_{PN}→0	≦±0.2mA @±3I_{PN}→0	
Isolation voltage	V_d			
Frequency bandwidth	f			
● General data				
Operating temperature	T_O			
Storage temperature	T_S			
Mass	m	105g	110g	110g
Note		Insulated plastic case recognized according to UL 94-V0		

● Applications

- ◆AC variable speed drives and servo motor
- ◆Static converters for DC motor drives
- ◆Battery supplied applications
- ◆Switched Mode Power Supplies(SMPS)
- ◆Uninterruptible Power Supplies(UPS)
- ◆Power supplies for welding applications

● Advantages

- ◆Excellent accuracy
- ◆Very good linearity
- ◆Low temperature drift
- ◆Optimized response time
- ◆Wide frequency bandwidth
- ◆High immunity to external interference
- ◆Very low insertion losses
- ◆Current overload capability

● Connection

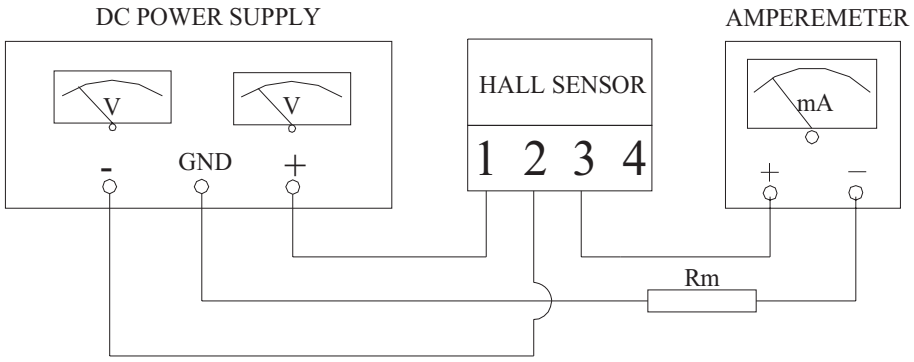

● Dimensions (Unit:mm/inch)

Front View

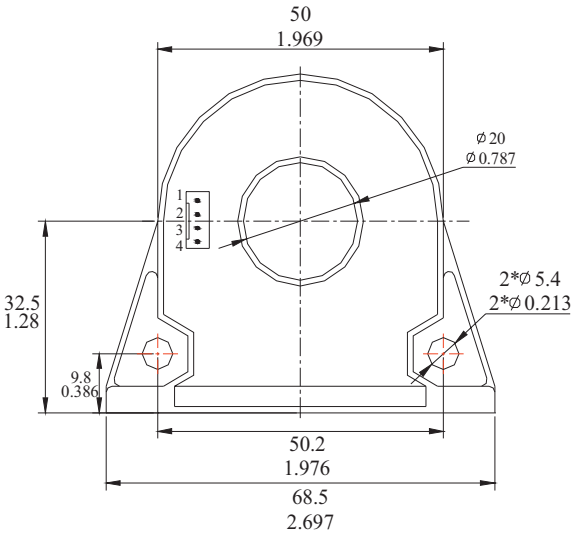

Right View

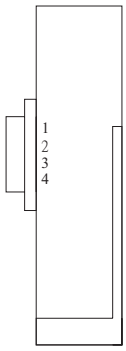

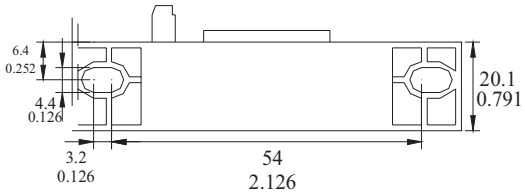

Bottom View

Secondary terminals	
terminal 1	+VCC
terminal 2	-VCC
terminal 3	OUTPUT
terminal 4	NC

Tol：±0.5mm/0.02inch

connection of secondary
Molex 22-04-1041

● Remarks

- ◆I_{OUT} is positive when I_P flows in the direction of the arrow.
- ◆Temperature of the primary conductor should not exceed 100℃.
- ◆These are standard models. For different versions(supply voltages, secondary connections, unidirectional measurements, operating temperatures, etc.)please contact us.

PEWATRON
a member of the Angst + Pfister Group

We are here for you. Addresses and Contacts

Sales Switzerland

Postcode 3000 – 9999
Liechtenstein

Matthias Rüegg
Ruhbergstrasse 32
CH-9230 Flawil

Phone + 41 44 877 35 18
Mobile + 41 76 491 66 66
Fax + 41 44 877 35 19

matthias.rueegg@pewatron.com

Postcode 1000 – 2999

Raffael Favaretto
Route d'Oron 124
CH-1673 Promasens

Phone + 41 44 877 35 22
Mobile + 41 76 444 63 14
Fax + 41 44 877 35 23

raffael.favaretto@pewatron.com

Sales Germany

Postcode 60000 – 79999

Dieter Hirthe
Mühlweg 23
D-71554 Weissach i.T.

Phone + 49 719 149 60 58
Mobile + 49 163 762 74 30
Fax + 49 719 193 31 88

dieter.hirthe@pewatron.com

Postcode 10000 – 59999
Postcode 80000 – 99999

Kurt Stritzelberger
Neumarkter Str. 86a
D-81673 Munich

Phone + 49 89 260 38 47
Mobile + 49 171 803 41 35
Fax + 49 89 43 10 91 91

kurt.stritzelberger@pewatron.com

Key Accounts
Aerospace and Defence

Claus Wübbena
Vogelkamp 26
D-26655 Westerstede

Phone + 49 4488 5204 614
Mobile + 49 173 9700 691
Fax + 49 4488 5204 616

claus.wuebbena@pewatron.com

Sales Austria

Kurt Stritzelberger
Neumarkter Str. 86a
D-81673 Munich

Phone + 49 89 260 38 47
Mobile + 49 17 18 03 41 35
Fax + 49 89 43 10 91 91

kurt.stritzelberger@pewatron.com

Sales Other Countries / Product Management

Sensors

Physical Sensors
Data Acquisition

Peter Felder
Phone + 41 44 877 35 05
peter.felder@pewatron.com

Geometrical Sensors

Eric Letsch
Phone + 41 44 877 35 14
eric.letsch@pewatron.com

Power Supplies

DC-DC Converters
Switching Power Supplies
DC-AC Inverters

Sebastiano Leggio
Phone + 41 44 877 35 06
sebastiano.leggio@pewatron.com

E-Components

Current Sensors
Man Machine Interface
Measurement Probes

Sebastiano Leggio
Phone + 41 44 877 35 06
sebastiano.leggio@pewatron.com

PEWATRON AG
Thurgauerstrasse 66
CH-8052 Zurich

Phone + 41 44 877 35 00
Fax + 41 44 877 35 25

www.pewatron.com
info@pewatron.com