AC Current transducer HX2R5..101X I_{PN}=2.5..100A

Split core transducer for the electronic measurement distorted AC waveforms current,with galvanic isolation between the primary (High power) and the secondary circuits(Electronic circuit).

LEAD FREE

RoHS COMPLIANT

● *Operating performances* (*AT =25 ℃*)

Performance \ Model		HX2R5X	HX100X	HX200X	HX500X	HX101X
Max.Load Current Measured	I_P (A)	2.5	10	20	50	100
Output Signal	I_{OUT}	4~20mA				
Supply Voltage	V_{CC}	18~35VDC				
Power Consumption	I_C	4 to 25mA				
Linearity	ε_L	±2%				
Measurement Accuracy	X	±2 %(Full scale)				
Termination Resistance Max	R_L	250Ω				

● *General data*

Operating temperature	T_O	-25～+85℃
Storage temperature	T_S	-40～+100℃
Operating Humidity	H_O	0~95%RH
Storage Humidity	H_S	0~98%RH
Mass	m	60g
Note		Insulated plastic case recognized according to UL 94-V0

● *Connection*

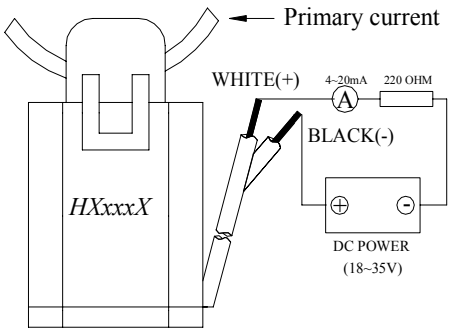

● *Dimensions* (Unit:mm/inch)

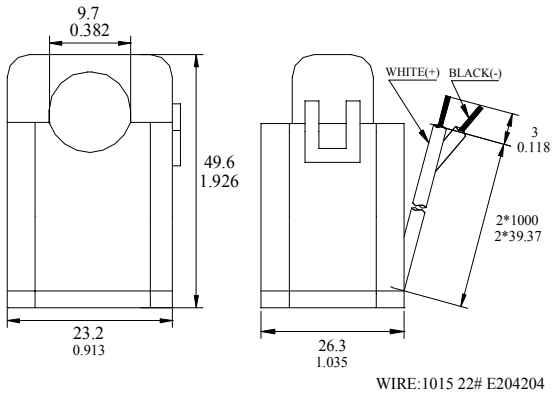

Tol：±0.3mm/0.012inch

PEWATRON
a member of the Angst + Pfister Group

We are here for you. Addresses and Contacts

Sales Switzerland

Postcode 3000 – 9999
Liechtenstein

Matthias Rüegg
Ruhbergstrasse 32
CH-9230 Flawil

Phone + 41 44 877 35 18
Mobile + 41 76 491 66 66
Fax + 41 44 877 35 19

matthias.rueegg@pewatron.com

Postcode 1000 – 2999

Raffael Favaretto
Route d'Oron 124
CH-1673 Promasens

Phone + 41 44 877 35 22
Mobile + 41 76 444 63 14
Fax + 41 44 877 35 23

raffael.favaretto@pewatron.com

Sales Germany

Postcode 60000 – 79999

Dieter Hirthe
Mühlweg 23
D-71554 Weissach i.T.

Phone + 49 719 149 60 58
Mobile + 49 163 762 74 30
Fax + 49 719 193 31 88

dieter.hirthe@pewatron.com

Postcode 10000 – 59999
Postcode 80000 – 99999

Kurt Stritzelberger
Neumarkter Str. 86a
D-81673 Munich

Phone + 49 89 260 38 47
Mobile + 49 171 803 41 35
Fax + 49 89 43 10 91 91

kurt.stritzelberger@pewatron.com

Key Accounts
Aerospace and Defence

Claus Wübbena
Vogelkamp 26
D-26655 Westerstede

Phone + 49 4488 5204 614
Mobile + 49 173 9700 691
Fax + 49 4488 5204 616

claus.wuebbena@pewatron.com

Sales Austria

Kurt Stritzelberger
Neumarkter Str. 86a
D-81673 Munich

Phone + 49 89 260 38 47
Mobile + 49 17 18 03 41 35
Fax + 49 89 43 10 91 91

kurt.stritzelberger@pewatron.com

Sales Other Countries / Product Management

Sensors

Physical Sensors
Data Acquisition

Peter Felder
Phone + 41 44 877 35 05
peter.felder@pewatron.com

Geometrical Sensors

Eric Letsch
Phone + 41 44 877 35 14
eric.letsch@pewatron.com

Power Supplies

DC-DC Converters
Switching Power Supplies
DC-AC Inverters

Sebastiano Leggio
Phone + 41 44 877 35 06
sebastiano.leggio@pewatron.com

E-Components

Current Sensors
Man Machine Interface
Measurement Probes

Sebastiano Leggio
Phone + 41 44 877 35 06
sebastiano.leggio@pewatron.com

PEWATRON AG
Thurgauerstrasse 66
CH-8052 Zurich

Phone + 41 44 877 35 00
Fax + 41 44 877 35 25

www.pewatron.com
info@pewatron.com