RAZTEC (NZ) LIMITED

ISO 9001

RAZTEC LINK CURRENT SENSOR

RAZL-1500 TAM

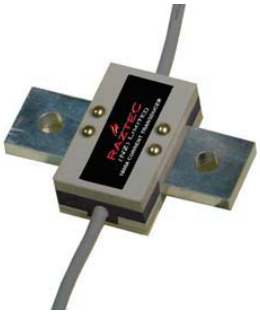

RAZL-1500 FAM

Absolute Maximum Ratings

Parameter	Symbol	Value	Unit
Operating Temperature	T_A	-40 to +125	^{0}C
Storage Temperature	T_{stg}	-65 to +150	^{0}C
Supply Voltage	Vs	10.5	V
Max Current (tab<70^{0}C)	Im	4500	A

Characteristics (T_A = 25^{0}C unless stated, Vs = 5V)

Parameter	Symbol	Lower Limit	Typical	Upper Limit	Unit
Supply Current (no load)	Is		14	17.4	mA
Supply Voltage	Vs	4.5	5.0	10.5	V
RMS Isolation Test Voltage (1 minute)	Vd	3			KV
Current range for <+/-1% error (-25 to +85^{0}C)	I_m	+/-1000			A
Null Output Voltage (bipolar)	Vo	-0.15	0	+0.15	V
Transfer Function (per turn, -25^{0}C to +85^{0}C) (Bipolar)	ΔV/I		2.9		mV/A
Measured Current	Im		1500		A
Combined non-linearity and hysteresis error (+/-1000A, -25^{0}C to +85^{0}C)				1.0	%
Null drift due to temperature change	$TC_{\Delta Vo/Vo}$		0.08	+/-0.8*	mV/K
Residual offset voltage	Ucm		.05		%
Gain change due to temperature change	TC_G	-0.1		+0.06	%/K
Crosstalk due to Im @ 25mm, worst orientation	ε_c			0.3	%
Resistance (excluding contact resistance)	Rs		15		μΩ
Rise time 0 to 200A	t_r		5**		μs
Frequency response	f_{-3dB}		120**		kHz
Output noise	E_{nrms}			1	mVrms
Effect of primary dv/dt (Equivalent measured Ampères/(Primary Volts/second) – for PWM applications)				4 X10^{-8}	AV^{-1}s

** Faster product available on request to 350KHz

© Raztec (NZ) Ltd 2004-2005
www.raztec.co.nz

RAZTEC (NZ) LIMITED
ISO 9001

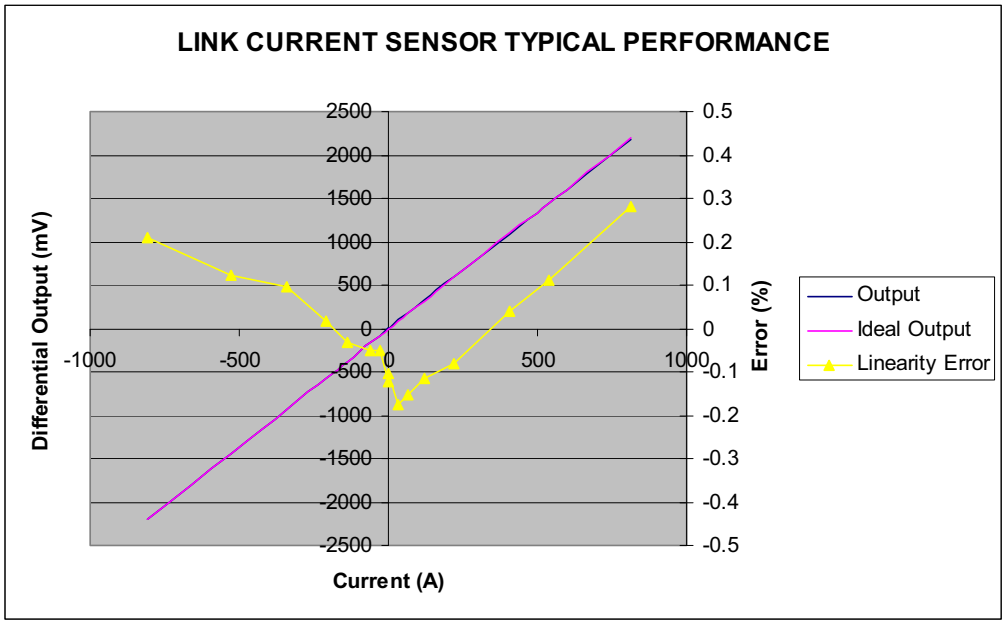

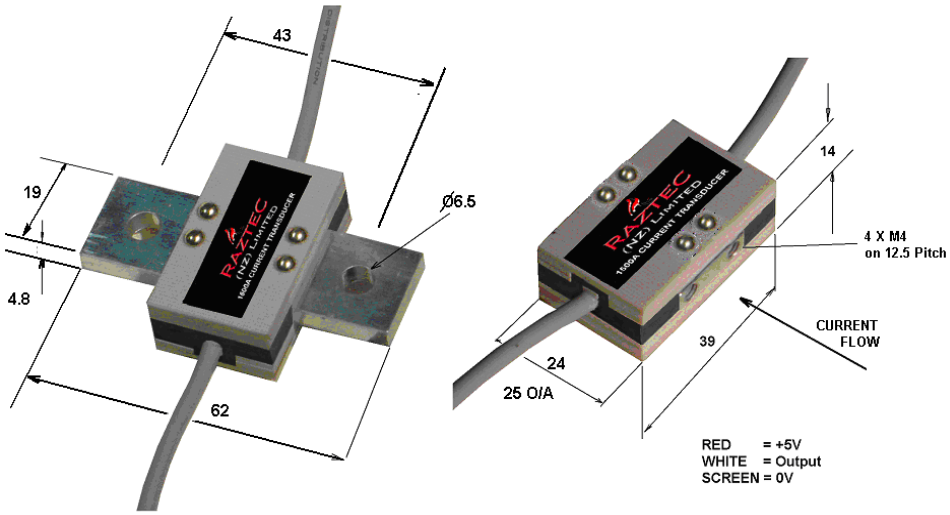

Product Description

© Raztec (NZ) Ltd 2004-2005
www.raztec.co.nz

RAZTEC (NZ) LIMITED

ISO 9001

The Raztec link sensor is a compact, high current, open loop current sensor, capable of operating under high overload and ambient temperature conditions.

It is specifically designed for applications where small size is critical and current needs to be measured economically.

The sensor incorporate two Hall effect magnetic field sensors arranged to give a bipolar output which greatly improves the sensors immunity to common mode effects. The output signal is effectively the difference between the two output signals which are brought out separately to ensure better noise rejection.

Electrostatic and magnetic screening is employed to reduce noise from high voltage switching transients and nearby current carrying conductors.

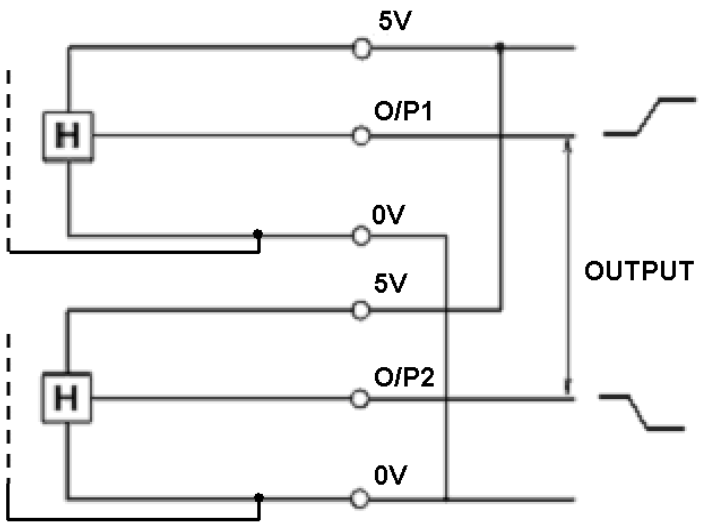

OPERATION PRINCIPLE

Rev 1.10

© Raztec (NZ) Ltd 2004-2005
www.raztec.co.nz

PEWATRON
a member of the Angst + Pfister Group

We are here for you. Addresses and Contacts

Sales Switzerland

Postcode 3000 – 9999
Liechtenstein

Matthias Rüegg
Ruhbergstrasse 32
CH-9230 Flawil

Phone + 41 44 877 35 18
Mobile + 41 76 491 66 66
Fax + 41 44 877 35 19

matthias.rueegg@pewatron.com

Postcode 1000 – 2999

Raffael Favaretto
Route d'Oron 124
CH-1673 Promasens

Phone + 41 44 877 35 22
Mobile + 41 76 444 63 14
Fax + 41 44 877 35 23

raffael.favaretto@pewatron.com

Sales Germany

Postcode 60000 – 79999

Dieter Hirthe
Mühlweg 23
D-71554 Weissach i.T.

Phone + 49 719 149 60 58
Mobile + 49 163 762 74 30
Fax + 49 719 193 31 88

dieter.hirthe@pewatron.com

Postcode 10000 – 59999
Postcode 80000 – 99999

Kurt Stritzelberger
Neumarkter Str. 86a
D-81673 Munich

Phone + 49 89 260 38 47
Mobile + 49 171 803 41 35
Fax + 49 89 43 10 91 91

kurt.stritzelberger@pewatron.com

Key Accounts
Aerospace and Defence

Claus Wübbena
Vogelkamp 26
D-26655 Westerstede

Phone + 49 4488 5204 614
Mobile + 49 173 9700 691
Fax + 49 4488 5204 616

claus.wuebbena@pewatron.com

Sales Austria

Kurt Stritzelberger
Neumarkter Str. 86a
D-81673 Munich

Phone + 49 89 260 38 47
Mobile + 49 17 18 03 41 35
Fax + 49 89 43 10 91 91

kurt.stritzelberger@pewatron.com

Sales Other Countries / Product Management

Sensors

Physical Sensors
Data Acquisition

Peter Felder
Phone + 41 44 877 35 05
peter.felder@pewatron.com

Geometrical Sensors

Eric Letsch
Phone + 41 44 877 35 14
eric.letsch@pewatron.com

Power Supplies

DC-DC Converters
Switching Power Supplies
DC-AC Inverters

Sebastiano Leggio
Phone + 41 44 877 35 06
sebastiano.leggio@pewatron.com

E-Components

Current Sensors
Man Machine Interface
Measurement Probes

Sebastiano Leggio
Phone + 41 44 877 35 06
sebastiano.leggio@pewatron.com

PEWATRON AG
Thurgauerstrasse 66
CH-8052 Zurich

Phone + 41 44 877 35 00
Fax + 41 44 877 35 25

www.pewatron.com
info@pewatron.com