High Frequency HX Series Specification

Applications

● Switching power supply

Features

● Frequency:20KHz~50KHzOperation Condition:Operation Temperature:-25℃~+125℃

●Fully RoHS Compliant

Electrical Specifications.

Part Number	TURNS	Terminals	Specification				Mechanical Dimension							DWG No.
			Rated Current	Sensitivity	Inductance 16K/1V	Terminating Resistance	A	B	C	D	E	F	G	
			1R(A)	S(V/A)	mH	(Ω)	mm							
HX56-6-555	50	1-3	10	1	5	50	18.0	10.0	21.0	5.0	12.5	4.0	0.8	HX56-6
HX56-6-655	100	1-3	24	1	20	100								
HX56-6-755	200	1-3	30	1	80	200								
HX56-6-855	300	1-3	35	1	180	300								
HX56-6-570(7)	25:25	1-2-3	10	1	5	50	18.0	10.0	21.0	5.0	12.5	4.0	0.8	
HX56-6-505(7)	50:50	1-2-3	24	1	20	100								
HX56-6-655(7)	100:100	1-2-3	30	1	80	200								
HX56-6-605(7)	150:150	1-2-3	35	1	180	300								
HX56-7-505	50	1-2	10	1	5	50	18.0	10.0	21.0	4.	12.5	4.0	0.8	HX56-7
HX56-7-655	100	1-2	24	1	20	100								
HX56-7-755	200	1-2	30	1	80	200								
HX56-7-855	300	1-2	35	1	180	300								
HX56-8-055	500	1-3	40	1	500	500	18.3	10.5	21.4	4.4	12.7	4.0	0.8	HX56-8
HX56-8-205	750	1-3	50	1	1125	750								
HX56-8-6555	1000	3-4	80	1	1800	1000								
HX57-6-505	50	3-4	10	1	5	50	16.9	12.4	17.4	15.0	10.0	4.0	0.7	HX57-6
HX57-6-655	100	3-4	24	1	20	100								
HX57-6-755	200	3-4	30	1	80	200								
HX57-6-855	300	3-4	35	1	180	300								
HX57-6-055	500	3-4	40	1	500	500								
HX57-6-205	750	3-4	50	1	1125	750								
HX57-6-6555	1000	3-4	80	1	1800	1000								

Dimensions : HX56-7

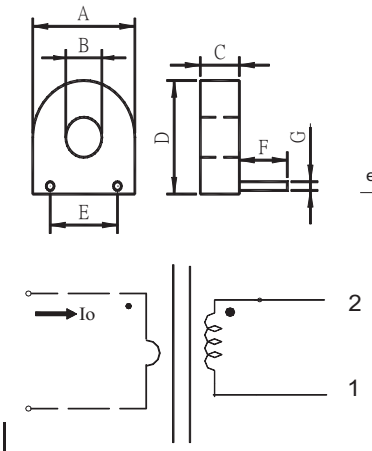

Dimensions : HX56-6, HX56-8

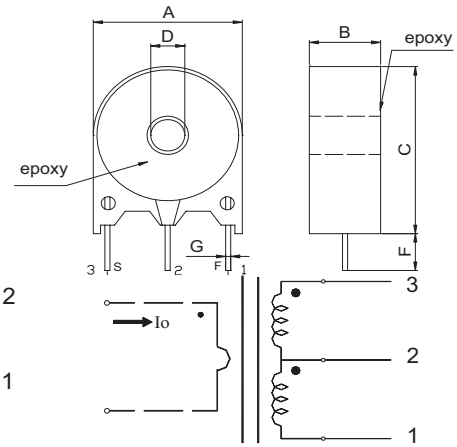

Dimensions : HX57-6

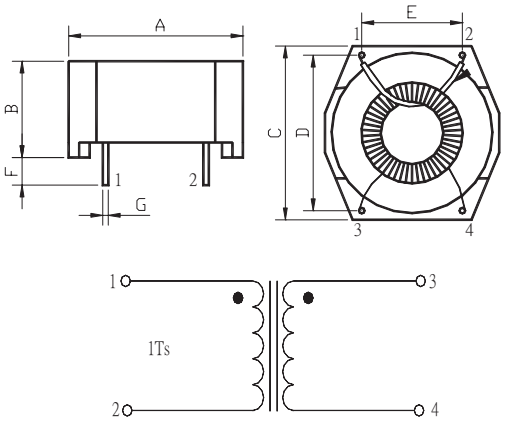

PEWATRON
a member of the Angst + Pfister Group

We are here for you. Addresses and Contacts

Sales Switzerland

Postcode 3000 – 9999
Liechtenstein

Matthias Rüegg
Ruhbergstrasse 32
CH-9230 Flawil

Phone + 41 44 877 35 18
Mobile + 41 76 491 66 66
Fax + 41 44 877 35 19

matthias.rueegg@pewatron.com

Postcode 1000 – 2999

Raffael Favaretto
Route d'Oron 124
CH-1673 Promasens

Phone + 41 44 877 35 22
Mobile + 41 76 444 63 14
Fax + 41 44 877 35 23

raffael.favaretto@pewatron.com

Sales Germany

Postcode 60000 – 79999

Dieter Hirthe
Mühlweg 23
D-71554 Weissach i.T.

Phone + 49 719 149 60 58
Mobile + 49 163 762 74 30
Fax + 49 719 193 31 88

dieter.hirthe@pewatron.com

Postcode 10000 – 59999
Postcode 80000 – 99999

Kurt Stritzelberger
Neumarkter Str. 86a
D-81673 Munich

Phone + 49 89 260 38 47
Mobile + 49 171 803 41 35
Fax + 49 89 43 10 91 91

kurt.stritzelberger@pewatron.com

Key Accounts
Aerospace and Defence

Claus Wübbena
Vogelkamp 26
D-26655 Westerstede

Phone + 49 4488 5204 614
Mobile + 49 173 9700 691
Fax + 49 4488 5204 616

claus.wuebbena@pewatron.com

Sales Austria

Kurt Stritzelberger
Neumarkter Str. 86a
D-81673 Munich

Phone + 49 89 260 38 47
Mobile + 49 17 18 03 41 35
Fax + 49 89 43 10 91 91

kurt.stritzelberger@pewatron.com

Sales Other Countries / Product Management

Sensors

Physical Sensors
Data Acquisition

Peter Felder
Phone + 41 44 877 35 05
peter.felder@pewatron.com

Geometrical Sensors

Eric Letsch
Phone + 41 44 877 35 14
eric.letsch@pewatron.com

Power Supplies

DC-DC Converters
Switching Power Supplies
DC-AC Inverters

Sebastiano Leggio
Phone + 41 44 877 35 06
sebastiano.leggio@pewatron.com

E-Components

Current Sensors
Man Machine Interface
Measurement Probes

Sebastiano Leggio
Phone + 41 44 877 35 06
sebastiano.leggio@pewatron.com

PEWATRON AG
Thurgauerstrasse 66
CH-8052 Zurich

Phone + 41 44 877 35 00
Fax + 41 44 877 35 25

www.pewatron.com
info@pewatron.com