VOY-67OX-F726

DIRECTION OF ROTATION

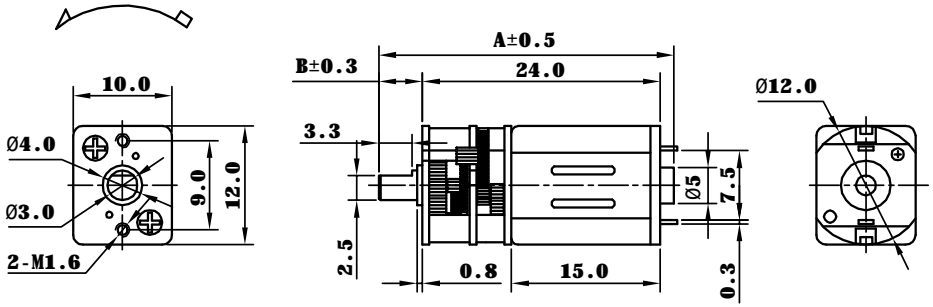

NOTES:

1. LENGTH OF SHAFT DIM "A" IS:30.0 mm.
2. FRONT EXTENSION DIM "B" IS:4.4 mm.
   MEASURED WITH SHAFT PUSHED TO END CAP.
3. END PLAY 0.05-0.5 mm.
4. DIRECTION OF ROTATION: COUNTER-CLOCKWISE WHEN VIEWING MOTOR OUTPUT END WITH POSITIVE VOLTAGE APPLIED TO POSITIVE TERMINAL.

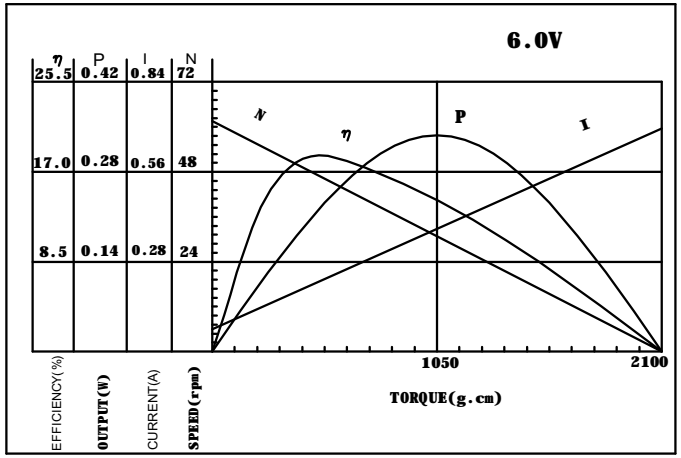

TEST CONDITION :

1. RATED VOLTAGE: 6.0VDC
2. OPERATING TEMPERATURE RANGE: -10°C---60°C
3. OPERATION 45'S INSPECTION

AT NO LOAD :

1. CURRENT: 0.07A Max
2. SPEED: 62±15%rpm

AT RATED LOAD :

1. CURRENT: 0.22A Max
2. OUTPUT: 0.24W
3. SPEED: 47±15%rpm
4. TORQUE: 500g.cm

AT STALL :

1. CURRENT: 0.70A Max
2. TORQUE: 2100g.cm Min

CONFIRMED&ACCEPTED BY CUSTOMER

DATE:

DRAW BY		CHECKED BY		APPROVED BY		DATE	05/08/2009	1

PEWATRON
a member of the Angst + Pfister Group

We are here for you. Addresses and Contacts

Sales Switzerland

Postcode 3000 – 9999
Liechtenstein

Matthias Rüegg
Ruhbergstrasse 32
CH-9230 Flawil

Phone + 41 44 877 35 18
Mobile + 41 76 491 66 66
Fax + 41 44 877 35 19

matthias.rueegg@pewatron.com

Postcode 1000 – 2999

Raffael Favaretto
Route d'Oron 124
CH-1673 Promasens

Phone + 41 44 877 35 22
Mobile + 41 76 444 63 14
Fax + 41 44 877 35 23

raffael.favaretto@pewatron.com

Sales Germany

Postcode 60000 – 79999

Dieter Hirthe
Mühlweg 23
D-71554 Weissach i.T.

Phone + 49 719 149 60 58
Mobile + 49 163 762 74 30
Fax + 49 719 193 31 88

dieter.hirthe@pewatron.com

Postcode 10000 – 59999
Postcode 80000 – 99999

Kurt Stritzelberger
Neumarkter Str. 86a
D-81673 Munich

Phone + 49 89 260 38 47
Mobile + 49 171 803 41 35
Fax + 49 89 43 10 91 91

kurt.stritzelberger@pewatron.com

Key Accounts
Aerospace and Defence

Claus Wübbena
Vogelkamp 26
D-26655 Westerstede

Phone + 49 4488 5204 614
Mobile + 49 173 9700 691
Fax + 49 4488 5204 616

claus.wuebbena@pewatron.com

Sales Austria

Kurt Stritzelberger
Neumarkter Str. 86a
D-81673 Munich

Phone + 49 89 260 38 47
Mobile + 49 171 803 41 35
Fax + 49 89 43 10 91 91

kurt.stritzelberger@pewatron.com

Sales Other Countries / Product Management

Sensors

Physical Sensors
Data Acquisition

Peter Felder
Phone + 41 44 877 35 05
peter.felder@pewatron.com

Geometrical Sensors

Eric Letsch
Phone + 41 44 877 35 14
eric.letsch@pewatron.com

Power Supplies

DC-DC Converters
Switching Power Supplies
DC-AC Inverters

Sebastiano Leggio
Phone + 41 44 877 35 06
sebastiano.leggio@pewatron.com

E-Components

Current Sensors
Man Machine Interface
Measurement Probes

Sebastiano Leggio
Phone + 41 44 877 35 06
sebastiano.leggio@pewatron.com

PEWATRON AG
Thurgauerstrasse 66
CH-8052 Zurich

Phone + 41 44 877 35 00
Fax + 41 44 877 35 25

www.pewatron.com
info@pewatron.com