RESISTIVE JOYSTICKS HANDLES

MODEL 100

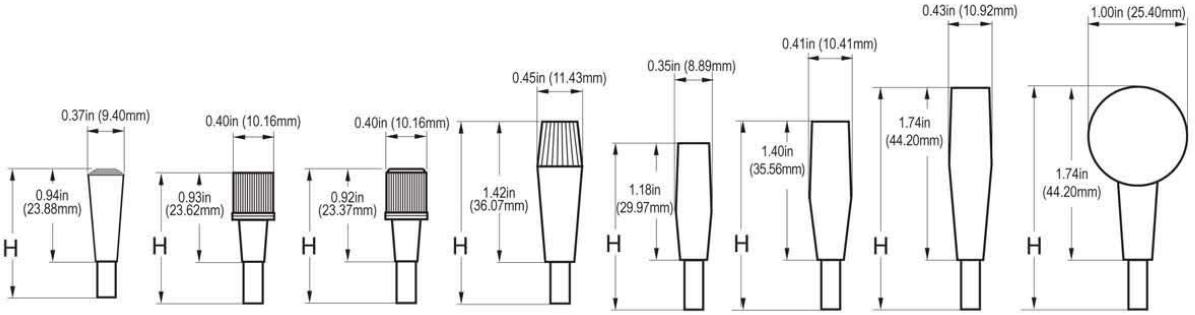

OPTION 0	OPTION 1	OPTION 2	OPTION 3	OPTION 6	OPTION A	OPTION B	OPTION C
HM = 1.33in (33.78mm)	HM = 1.38in (35.05mm)	HM = 1.37in (34.80mm)	HM = 2.03in (51.56mm)	HM = 1.34in (34.04mm)	HM = 2.09in (53.09mm)	HM = 2.43in (61.72mm)	HM = 2.47in (62.74mm)
HS = 1.32in (33.53mm)	HS = 1.36in (34.54mm)	HS = 1.34in (34.04mm)	HS = 2.02in (51.31mm)	HS = 1.32in (33.53mm)	HS = 2.06in (52.32mm)	HS = 2.42in (61.47mm)	HS = 2.45in (62.23mm)

MODEL 300

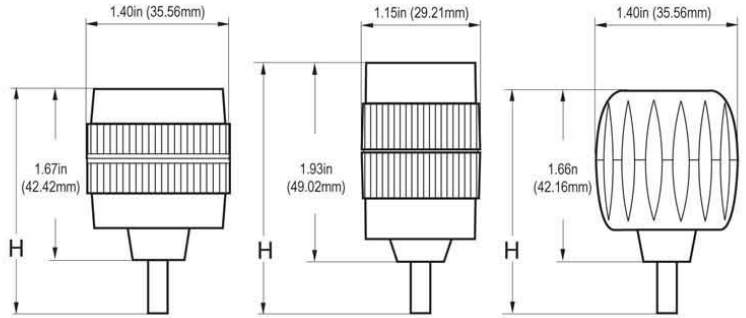

OPTION 8	OPTION K	OPTION M
HM = 2.35in (59.69m	HM = 2.63in (66.80mm)	HM = 2.36in (59.94mm)
HS = 2.34in (59.44mm)	HS = 2.61in (66.29mm)	HS = 2.34in (59.44mm)

MODEL 200

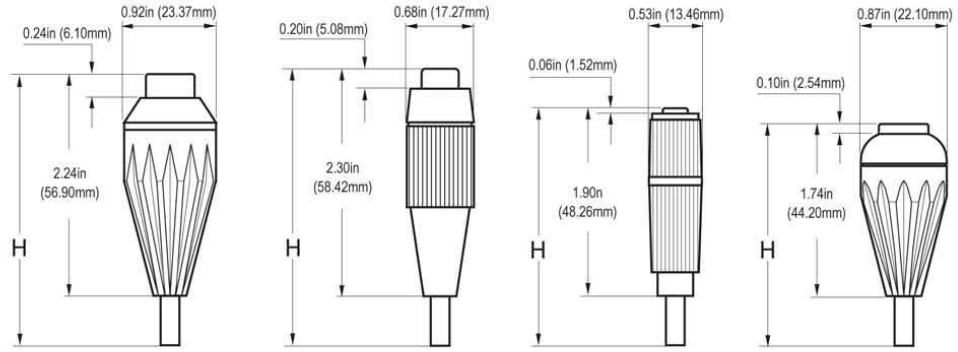

OPTION 5	OPTION E	OPTION G	OPTION H
HM = 2.80in (71.12mm)	HM = 3.00in (76.20mm)	HM = 2.58in (65.53mm)	HM = 2.33in (59.18mm)
HS = 2.78in (70.61mm)	HS = 2.98in (75.69mm)	HS = 2.56in (65.02mm)	HS = 2.31in (58.67mm)

MODEL 400

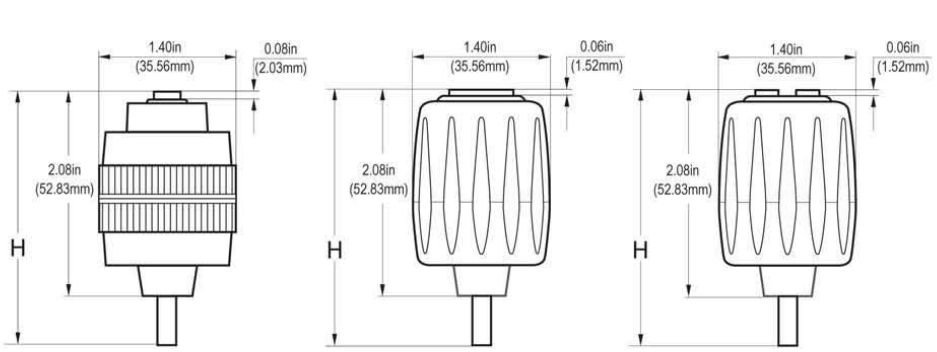

OPTION 9	OPTION N	OPTION Q
HM = 2.77in (70.36mm)	HM = 2.81in (71.37mm)	HM = 2.81in (71.37mm)
HS = 2.73in (69.34mm)	HS = 2.78in (70.61mm)	HS = 2.77in (70.36mm)

CH Made in USA

NOTES: **HM** = height above the housing dimension (**H**) for **Miniature** Joysticks
HS = height above the housing dimension (**H**) for **Standard** Joysticks
The drawings are not to scale, but are proportional.

TD057 - Page 2 - 2/15/07/VS

PEWATRON
a member of the Angst + Pfister Group

We are here for you. Addresses and Contacts

Sales Switzerland

Postcode 3000 – 9999
Liechtenstein

Matthias Rüegg
Ruhbergstrasse 32
CH-9230 Flawil

Phone + 41 44 877 35 18
Mobile + 41 76 491 66 66
Fax + 41 44 877 35 19

matthias.rueegg@pewatron.com

Postcode 1000 – 2999

Raffael Favaretto
Route d'Oron 124
CH-1673 Promasens

Phone + 41 44 877 35 22
Mobile + 41 76 444 63 14
Fax + 41 44 877 35 23

raffael.favaretto@pewatron.com

Sales Germany

Postcode 60000 – 79999

Dieter Hirthe
Mühlweg 23
D-71554 Weissach i.T.

Phone + 49 719 149 60 58
Mobile + 49 163 762 74 30
Fax + 49 719 193 31 88

dieter.hirthe@pewatron.com

Postcode 10000 – 59999
Postcode 80000 – 99999

Kurt Stritzelberger
Neumarkter Str. 86a
D-81673 Munich

Phone + 49 89 260 38 47
Mobile + 49 171 803 41 35
Fax + 49 89 43 10 91 91

kurt.stritzelberger@pewatron.com

Key Accounts
Aerospace and Defence

Claus Wübbena
Vogelkamp 26
D-26655 Westerstede

Phone + 49 4488 5204 614
Mobile + 49 173 9700 691
Fax + 49 4488 5204 616

claus.wuebbena@pewatron.com

Sales Austria

Kurt Stritzelberger
Neumarkter Str. 86a
D-81673 Munich

Phone + 49 89 260 38 47
Mobile + 49 171 803 41 35
Fax + 49 89 43 10 91 91

kurt.stritzelberger@pewatron.com

Sales Other Countries / Product Management

Sensors

Physical Sensors
Data Acquisition

Peter Felder
Phone + 41 44 877 35 05
peter.felder@pewatron.com

Geometrical Sensors

Eric Letsch
Phone + 41 44 877 35 14
eric.letsch@pewatron.com

Power Supplies

DC-DC Converters
Switching Power Supplies
DC-AC Inverters

Sebastiano Leggio
Phone + 41 44 877 35 06
sebastiano.leggio@pewatron.com

E-Components

Current Sensors
Man Machine Interface
Measurement Probes

Sebastiano Leggio
Phone + 41 44 877 35 06
sebastiano.leggio@pewatron.com

PEWATRON AG
Thurgauerstrasse 66
CH-8052 Zurich

Phone + 41 44 877 35 00
Fax + 41 44 877 35 25

www.pewatron.com
info@pewatron.com