CH Products

an APEM Group Company

IPD Ultima

Premium USB desktop controllers

The IPD Ultima features a premium soft touch Business Blue coating, 10 vibrant high efficiency LED pushbuttons as well as a precision two button three axes Hall effect joystick. Featuring USB 1.1 HID compliant interface, the IPD Ultima brings sophistication and comfort to PTZ network camera control.

KEY FEATURES

- ❑ **3 axes joystick for P/T/Z control**
- ❑ **LED pushbutton switches**
- ❑ **USB 1.1 HID compliant "game controller"**
- ❑ **Soft touch Business Blue coating**
- ❑ **Optional programming software**

IPD Ultima

Premium USB desktop controllers

SPECIFICATIONS

Joystick performance	–	Hall effect three axes joystick
	–	X/Y/Z for positioning control
Joystick travel	–	36° for X and Y axes
	–	60°for Z axis
Centering	–	Single spring, omni-directional
Joystick shaft	–	Stainless steel
Joystick boot	–	Neoprene
Joystick handle	–	Glass filled nylon
Pushbutton performance	–	10 vibrant, high efficiency back lit LED pushbuttons rated for 10,000,000 life cycles
	–	Two tactile pushbuttons on joystick rated for 3,000,000 life cycles
Desktop housing	–	High impact ABS Soft touch Business Blue coating
Power	–	Via USB interface (5V DC)
	–	Consumption 300mA
Operating conditions	–	-25 to +85°C (-13 to +185°F)
Approvals	–	EN 55024:1998, EN 55022, CE
	–	FCC Part 15 Subpart B Class B
	–	RoHs compliant
Weight	–	455 g (1.00lb)
Interface	–	USB port
Connectors	–	USB Type A Male
	–	Cable Length: 2m; 6ft. 6.8in.
Systems support integration	–	Windows 7, Vista, XP, 2000
Supported protocols	–	USB HID 1.1 game controller
	–	Direct X (Gaming Control)
	–	Joystick: Three HID axes
	–	Pushbuttons: 12 HID buttons
	–	Uses standard DirectX HID drivers
	–	Connects directly to workstation PC
Environmental	–	For indoor use only

NOTE:
All values are nominal

- IP Desktop Software is an optional utility that creates a joystick/mouse combination device and allows users to toggle between both devices with the press of a button. In addition to dual joystick/mouse functionality, IP Desktop Software creates an additional fourth joystick axis, "R." The additional “R” axis is ideally suited for jog/shuttle control of video playback.
- IP Desktop Software is designed to work with the IP Desktop range in a Windows based operating system.

Note: The company reserves the right to change specifications without notice.

IPD Ultima

Premium USB desktop controllers

DIMENSIONAL DRAWINGS

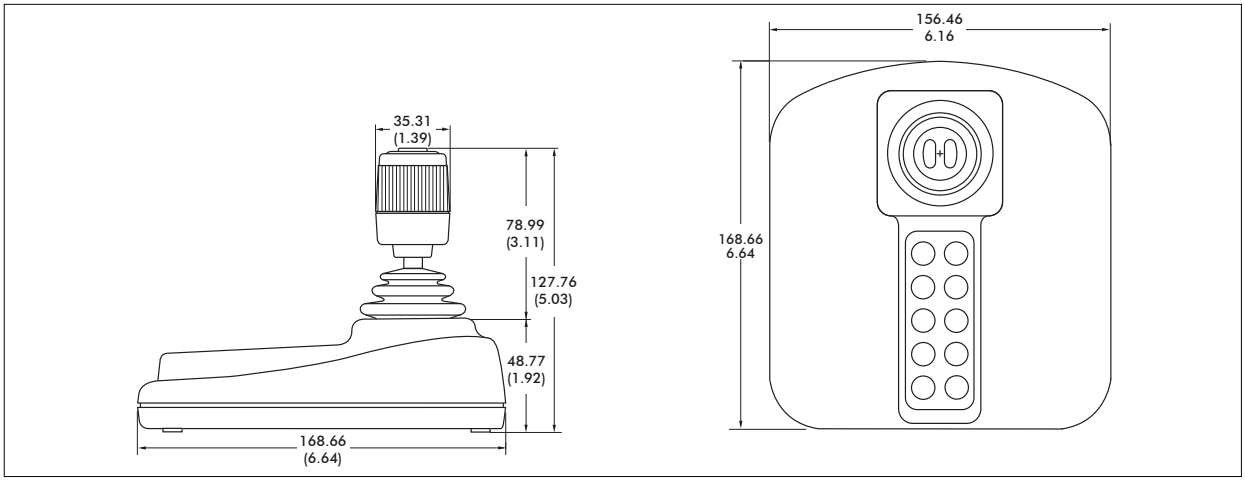

Note: Dimensions are in mm/(inch)

USB 1.1 HID COMPLIANT GAME CONTROLLER

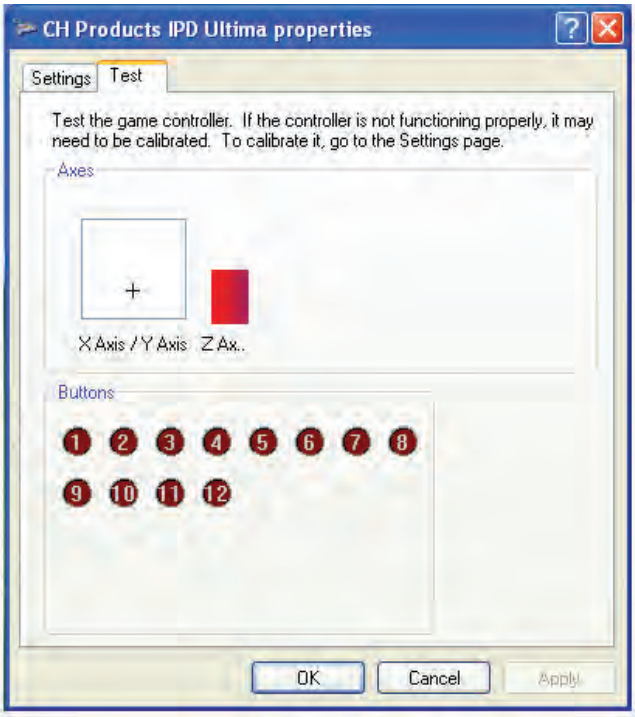

Note: To order the IPD Ultima please refer to Part Number 100-650.

Note: The company reserves the right to change specifications without notice.

PEWATRON
a member of the Angst + Pfister Group

We are here for you. Addresses and Contacts

Sales Switzerland

Postcode 3000 – 9999
Liechtenstein

Matthias Rüegg
Ruhbergstrasse 32
CH-9230 Flawil

Phone + 41 44 877 35 18
Mobile + 41 76 491 66 66
Fax + 41 44 877 35 19

matthias.rueegg@pewatron.com

Postcode 1000 – 2999

Raffael Favaretto
Route d'Oron 124
CH-1673 Promasens

Phone + 41 44 877 35 22
Mobile + 41 76 444 63 14
Fax + 41 44 877 35 23

raffael.favaretto@pewatron.com

Sales Germany

Postcode 60000 – 79999

Dieter Hirthe
Mühlweg 23
D-71554 Weissach i.T.

Phone + 49 719 149 60 58
Mobile + 49 163 762 74 30
Fax + 49 719 193 31 88

dieter.hirthe@pewatron.com

Postcode 10000 – 59999
Postcode 80000 – 99999

Kurt Stritzelberger
Neumarkter Str. 86a
D-81673 Munich

Phone + 49 89 260 38 47
Mobile + 49 171 803 41 35
Fax + 49 89 43 10 91 91

kurt.stritzelberger@pewatron.com

Key Accounts
Aerospace and Defence

Claus Wübbena
Vogelkamp 26
D-26655 Westerstede

Phone + 49 4488 5204 614
Mobile + 49 173 9700 691
Fax + 49 4488 5204 616

claus.wuebbena@pewatron.com

Sales Austria

Kurt Stritzelberger
Neumarkter Str. 86a
D-81673 Munich

Phone + 49 89 260 38 47
Mobile + 49 17 18 03 41 35
Fax + 49 89 43 10 91 91

kurt.stritzelberger@pewatron.com

Sales Other Countries / Product Management

Sensors

Physical Sensors
Data Acquisition

Peter Felder
Phone + 41 44 877 35 05
peter.felder@pewatron.com

Geometrical Sensors

Eric Letsch
Phone + 41 44 877 35 14
eric.letsch@pewatron.com

Power Supplies

DC-DC Converters
Switching Power Supplies
DC-AC Inverters

Sebastiano Leggio
Phone + 41 44 877 35 06
sebastiano.leggio@pewatron.com

E-Components

Current Sensors
Man Machine Interface
Measurement Probes

Sebastiano Leggio
Phone + 41 44 877 35 06
sebastiano.leggio@pewatron.com

PEWATRON AG
Thurgauerstrasse 66
CH-8052 Zurich

Phone + 41 44 877 35 00
Fax + 41 44 877 35 25

www.pewatron.com
info@pewatron.com