CH Products

an APEM Group Company

HT series

Ruggedized Hall effect joysticks

The HT Series joystick is a long life cycle, Hall effect controller providing reliable multi-axes finger positioning control. Available in single, dual, and triple axes configurations, HT Series joysticks are ideal for harsh environments, finger operated applications requiring increased durability and reliability. Widely used applications include on-road enclosed cabin vehicles, unmanned vehicles and military robotics.

KEY FEATURES

- ❑ **Rugged finger positioning control**
- ❑ **Available with CANbus J1939**
- ❑ **Available with USB 1.1 HID compliant interface**
- ❑ **1, 2 and 3 axes configuration**
- ❑ **10 million life cycles**
- ❑ **Sealing up to IP68**

HT series

Ruggedized Hall effect joysticks

OPTION SELECTION

HT

SERIES

LIMITER PLATE

S	Square	□
R	Round	○
X	Slotted	—
Y	Slotted	|
P	Plus	+
C	Cross	×

OUTPUT OPTIONS

0	0V to 5V (Rail to Rail)
1	0.5V to 4.5V
2	0.25V to 4.75V
3	1V to 4V
4	0V to 5V - Sensor 1 0V to 5V - Sensor 2
5	0.5V to 4.5V - Sensor 1 0.5V to 4.5V - Sensor 2
6	0.25V to 4.75V - Sensor 1 0.25V to 4.75V - Sensor 2
7	1V to 4V - Sensor 1 1V to 4V - Sensor 2
8	0V to 5V - Sensor 1 5V to 0V - Sensor 2
9	0.5V to 4.5V - Sensor 1 4.5V to 0.5V - Sensor 2
10	0.25V to 4.75V - Sensor 1 4.75V to 0.25V - Sensor 2
11	1V to 4V - Sensor 1 4V to 1V - Sensor 2
0-D	Discrete
0-U	USB
1-J	Cursor Emulation
2-C	CANbus

HANDLE

-10	Ball Tip (2 Axes)
-11	Tapered (2 Axes)
-22	1 Pushbutton (2 Axes)
-27	1 Sealed Pushbutton (2 Axes)
-33	3 Axes
-44	1 Pushbutton (3 Axes)
-45	2 Pushbuttons (3 Axes)
-46	Low Profile (3 Axes)

MOUNTING

1	Drop-in
4	Rear Mount

ADDITIONAL OPTIONS

-V	Voltage Regulator
-D	Dual Decode
-DC	Center Detect
-AD	Analog Deadband

NOTES

1. Dual Decode cannot be used with CANbus, USB, or Voltage Regulator.

Up to IP68 available.

Mounting accessories. Standard hardware includes: gasket, clamping ring, and four 40-3/4Phil Ph MS SS screws.

Note: The company reserves the right to change specifications without notice.

HT series

Ruggedized Hall effect joysticks

SPECIFICATIONS

MECHANICAL (FOR X, Y AXES)		
Break Out Force	–	1.8N (0.4lbf)
Operating Force	–	3.5N (0.75lbf)
Maximum Applied Force	–	450N (100lbf)
Mechanical Angle of Movement	–	40°
Expected Life	–	10 million cycles
Material	–	Glass filled nylon
Lever Action	–	Spring centering

MECHANICAL (FOR Z AXIS)		
Break Out Torque	–	0.09N·m (0.80lbf·in)
Operating Torque	–	0.121N·m (1.07lbf·in)
Maximum Allowable Torque	–	0.150N·m (1.33lbf·in)
Hand Mechanical Angle	–	60°
Handle Action	–	Spring centering
Expected Life	–	10 million cycles

ENVIRONMENTAL		
Operating Temperature	–	-25°C to 70°C (-13°F to 158°F)
Storage Temperature	–	-40°C to 70°C (-40°F to 158°F)
Sealing (IP)	–	IP65 to IP68*
EMC Immunity Level (V/M)	–	IEC 61000-4-3: 2006
EMC Emissions Level	–	IEC 61000-4-8: 1993/A1: 2000
ESD	–	IEC 61000-4-2: 2008
Vibration Crash (non operational)	–	IAW MIL-STD-810F Method 516.5 Procedure V, Table 516.5-8 SRS (75G)
Vibration Shock (non operational)	–	IAW MIL-STD-810F, Method 516.5, Procedure 1, 40G peak sine wave pulse with 11ms duration
Vibration Shock (operational)	–	IAW MIL-STD-810F, Method 516.5, Procedure, 20G peak half sine wave pulse with 11ms duration

ELECTRICAL		
Sensor	–	Hall effect
Resolution	–	Infinite
Supply Voltage Operating	–	5.00VDC
Reverse Polarity Max	–	–14.5VDC
Overvoltage Max	–	18VDC
Output Voltage	–	See options
Output Impedance	–	6Ω
Current Consumption Max	–	10mA per axis
Return to Center Voltage (No Load)	–	±200mV
Output Ramp	–	See options

CANbus OUTPUT VERSION		
Supply Voltage Range	–	6V to 40V
CANbus Version	–	J1939

NOTES:

- All values are nominal
- Exact specifications may be subject to configuration.
  Contact Technical Support for the performance of your specific configuration.
- * Excludes some handle options

Note: The company reserves the right to change specifications without notice.

HT series

Ruggedized Hall effect joysticks

DIMENSIONAL DRAWINGS

10

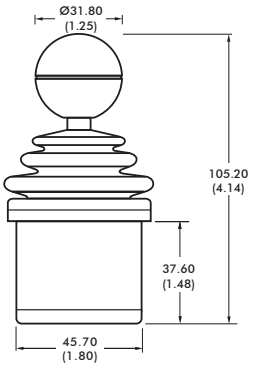

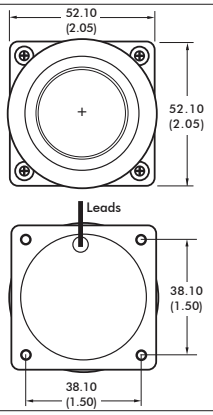

11

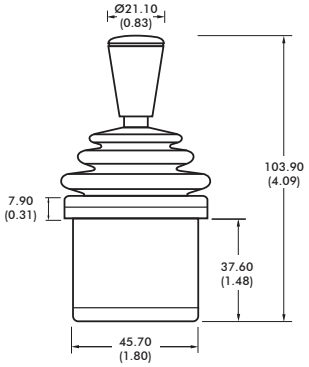

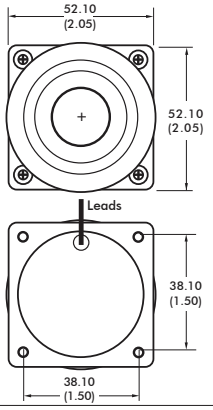

27

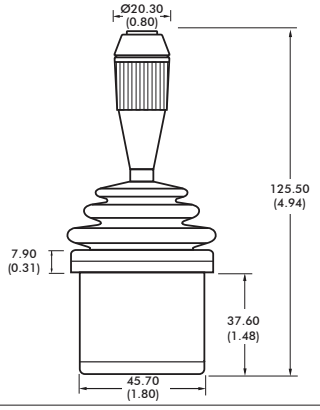

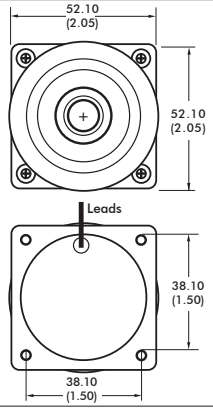

33

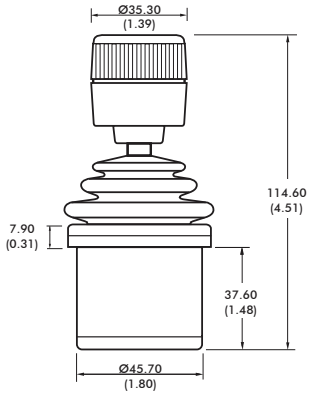

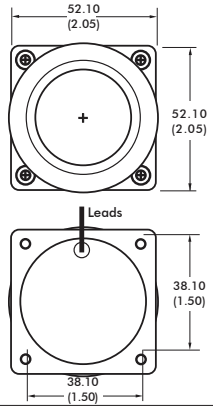

Note: The company reserves the right to change specifications without notice.

HT series

Ruggedized Hall effect joysticks

DIMENSIONAL DRAWINGS - continued

44

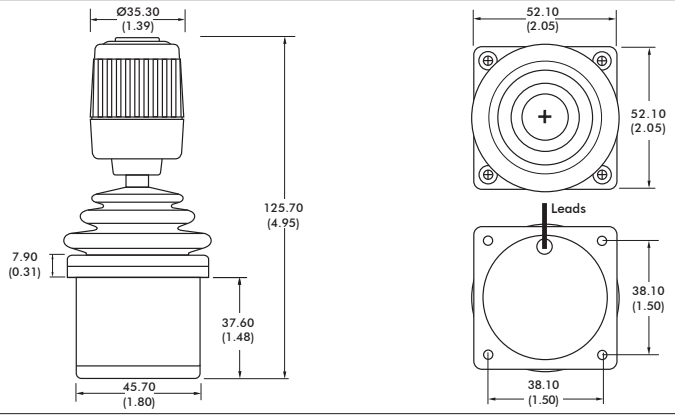

45

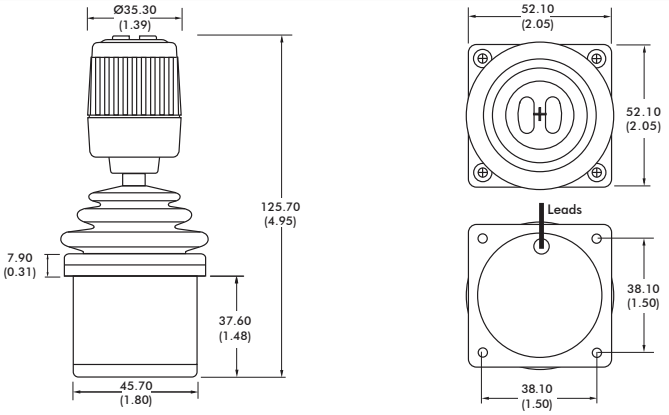

46

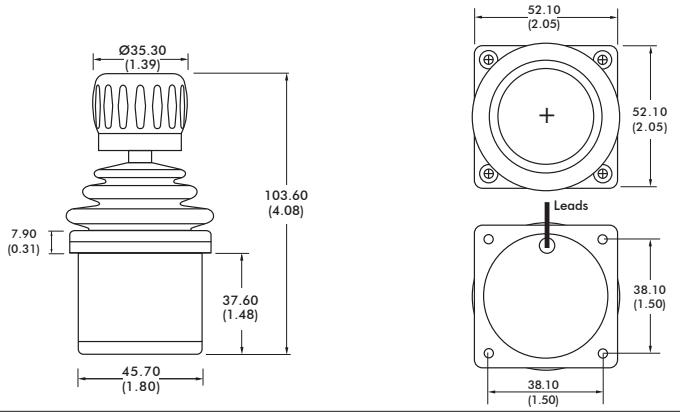

NOTES:

1. Dimensions are in mm/(inch)
2. Axes orientation:

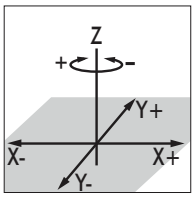

DEFAULT WIRE COLOR CODE*		
COLOR	FUNCTION	AWG
RED	Vcc or Vdd	
BLACK	Ground	
BLUE	X Axis	28
YELLOW	Y Axis	
GREEN	Z Axis	
WHITE	Switch Common (optional)	
ORANGE	Switch 1 (optional)	22
VIOLET	Switch 2 (optional)	

* - Starting from the strain relief, the leads are 178mm (7in) long, 3.18mm (0.125in) stripped.

Note: The company reserves the right to change specifications without notice.

HT series

Ruggedized Hall effect joysticks

DIMENSIONAL DRAWINGS - continued

PANEL CUTOUT DIMENSIONS

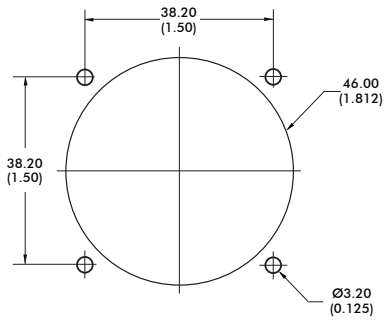

DROP-IN

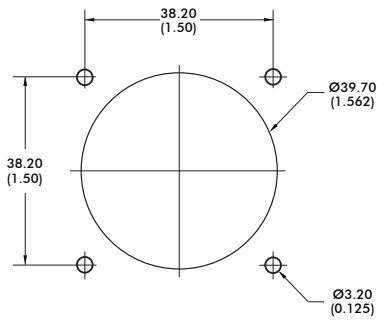

REAR MOUNT

CLAMPING RING

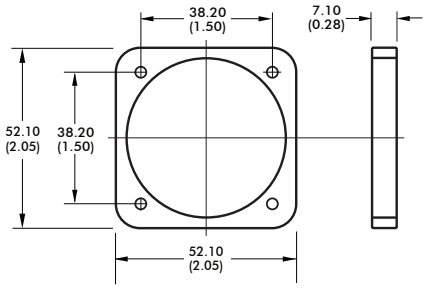

MOUNTING OPTIONS

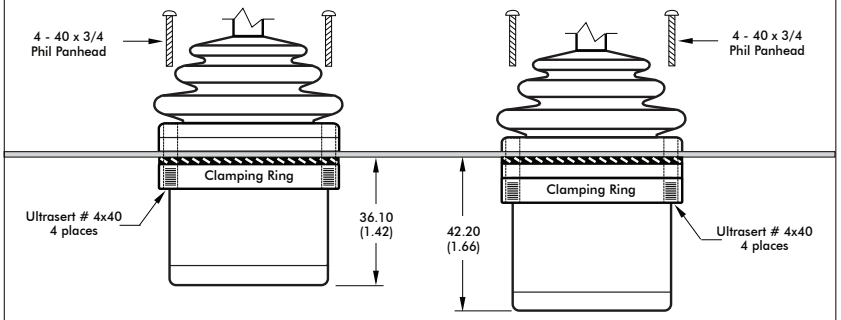

DROP-IN REAR MOUNT

- Panel
- Gasket = 0.50mm (0.02in)

NOTES:

- For DROP-IN mounting, the panel thickness can be 1.17mm to 3.17mm (0.046in to 0.125in).
- For REAR MOUNT the maximum panel thickness is 1.6mm (0.063in).
- A panel thickness of 1/16" (1.6mm/0.063in) was considered for all the below-panel depth values.
- The below-panel depth is extended by 7.11mm (0.28in) with the Joyball, USB, CANbus, Voltage Regulator, Dual Decode, Center Detect, Discrete Board, Analog Deadband,and Dual Sensor options.

Note: The company reserves the right to change specifications without notice.

HT series

Ruggedized Hall effect joysticks

CONFIGURATION OPTIONS

LINEAR OUTPUT OPTIONS

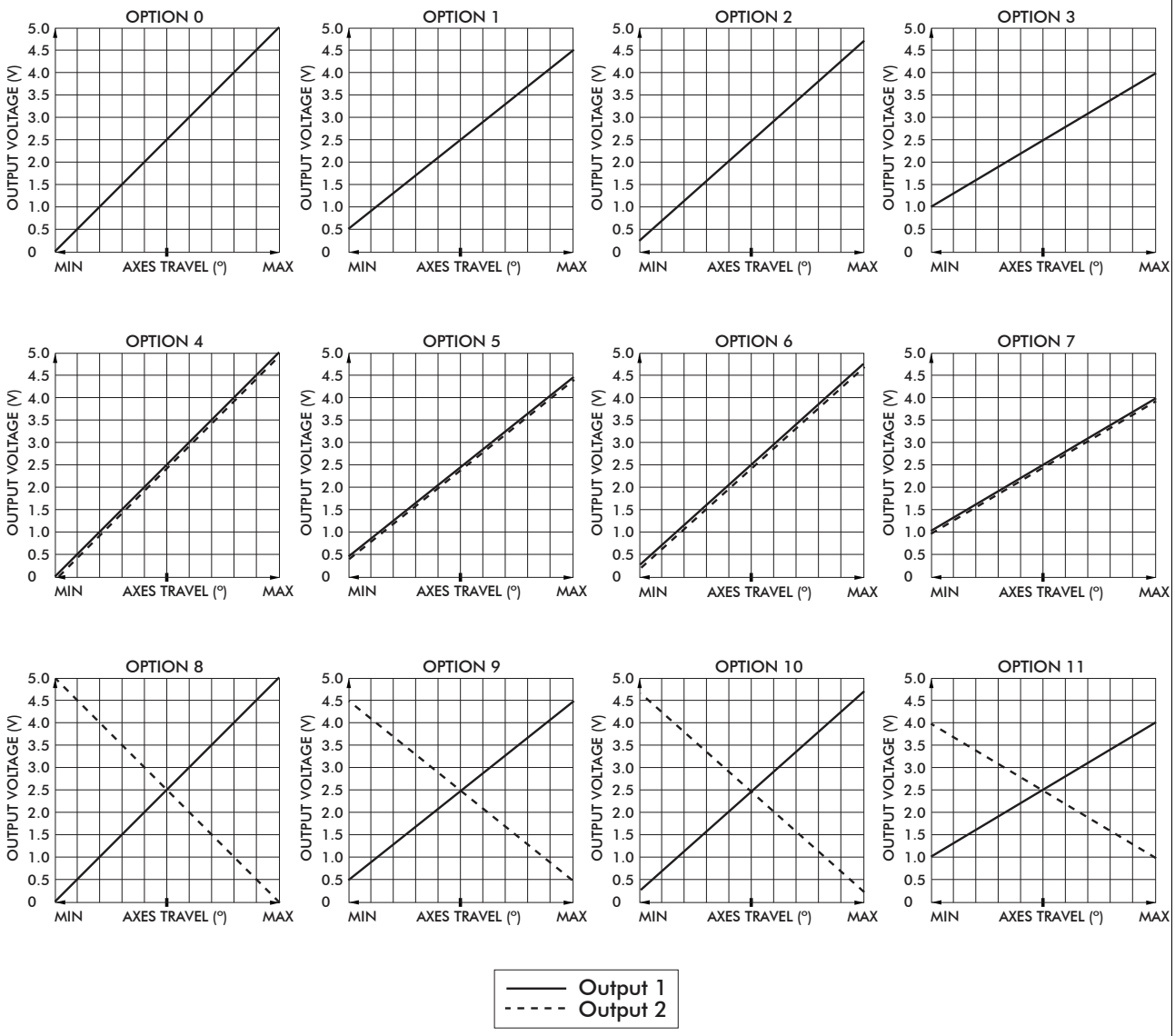

Note: The company reserves the right to change specifications without notice.

HT series

Ruggedized Hall effect joysticks

CONFIGURATION OPTIONS - continued

ADDITIONAL OUTPUT OPTIONS

CANbus J1939

CH Products HT CANbus joysticks conform to the SAE J1939 serial bus specification used for communications between electronic control units and vehicle components.

FEATURES

- CANbus J1939
- Extended I/O extension for up to 2 digital and 3 analog inputs
- Accommodates a 6-40VDC power supply

ELECTRICAL SPECIFICATIONS		
Supply Power:	-	6 – 40 VDC
Supply Current:	-	15mA min, +5mA per LED, +6mA per axis

WIRING SPECIFICATION		
Red Wire	-	Supply Power
Black Wire	-	Ground
Green Wire	-	CAN high data
White Wire	-	CAN low data
Blue Wire	-	Identifier Select
Orange Wire	-	Identifier Select

CONNECTOR OPTIONS:

- Cable assembly with Deutsch DT04 style plugs
- External I/O harnessing per customer specification

CANbus CONFIGURATION CHART

- Contact factory for assistance

BAUD RATE (Check one)			250K		500K		1000K										BLUE WIRE	ORANGE WIRE
11 BIT IDENTIFIER (CAN2.0A) (Hex)	#1	TX	1		0												G	G
		RX																
	#2	TX																G
		RX																
	#3	TX															G	
		RX																
	#4	TX																
		RX																
29 BIT IDENTIFIER (CAN2.0B) (Hex)	#1	TX	3		2		1		0								G	G
		RX																
	#2	TX																G
		RX																
	#3	TX															G	
		RX																
	#4	TX																
		RX																
8 BYTE TX DATA FRAME (Binary)			7		6		5		4		3		2		1		0		IDENTIFIER SELECT WIRES (SUPPLIED IN PIGTAIL) G=TIED TO 0V (BLACK WIRE)	
8 BYTE RX DATA FRAME (Binary)																				
AXIS DATA TYPE (Check one)			SIGNED CHAR (+/-127)		UNSIGNED CHAR (0-255)		UNSIGNED INT (0-1023)		UNSIGNED INT (0-4095)									

Note: The company reserves the right to change specifications without notice.

HT series

Ruggedized Hall effect joysticks

CONFIGURATION OPTIONS - continued

ADDITIONAL OUTPUT OPTIONS

PLUG-AND-PLAY SOLUTIONS:

USB

Featuring USB 1.1 HID compliant interface, CH Products' USB joysticks are recognized as standard HID "game controller" devices. Adhering to the HID specification, CH Products' USB joysticks are plug-and-play with most versions of Windows and Linux. Joystick button and axes assignments are dependent upon the controlled application.

FEATURES

- USB 1.1 HID compliant "game controller" device
- Easy to install and operate
- Functions determined by controlled application
- Standard Male Type A Connector

USB Male Type A Connector

SUPPLIED WIRING

USB: USB Male Type A Connector with overmolded cable
(Optional ruggedized military connectors are available.)

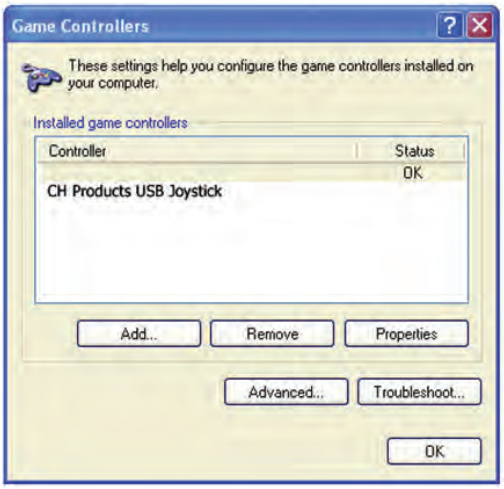

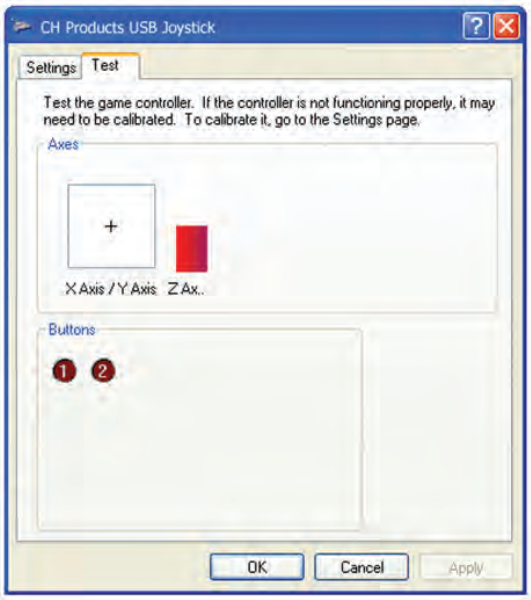

Note: The company reserves the right to change specifications without notice.

HT series

Ruggedized Hall effect joysticks

CONFIGURATION OPTIONS - continued

ADDITIONAL OUTPUT OPTIONS

PLUG-AND-PLAY SOLUTIONS:

JOYBALL (CURSOR EMULATION)

The Joyball option converts multi-axis joystick output into a mouse, trackball, or cursor control device. The joystick's internal microprocessor converts absolute axis position into a curser velocity, which is translated as a relative trackball or mouse position. Supported protocols include Sun Microsystems (mouse systems 5vdc serial) and USB.

APPLICATIONS

The Joyball option is ideal for vehicle applications subjected to dirt and high vibration which makes operating a traditional cursor control device difficult. The Joyball option is widely used in shipboard and military applications.

FEATURES

- HID compliant "pointing device"
- Plug-and-play with USB option
- Ideal for marine GPS and navigation
- Environmental sealing up to IP68

SUPPLIED WIRING

USB: USB Male Type A Connector with overmolded cable
SUN: SUN mini-DIN plug with overmolded cable and strain relief

I/O COMPLEMENT/ USER SPECIFIED PARAMETERS:

- USB 4 pushbuttons 2 or 3 axes (X, Y, and Z "scroll")
- SUN 2 pushbuttons and 2 axes (X, Y)

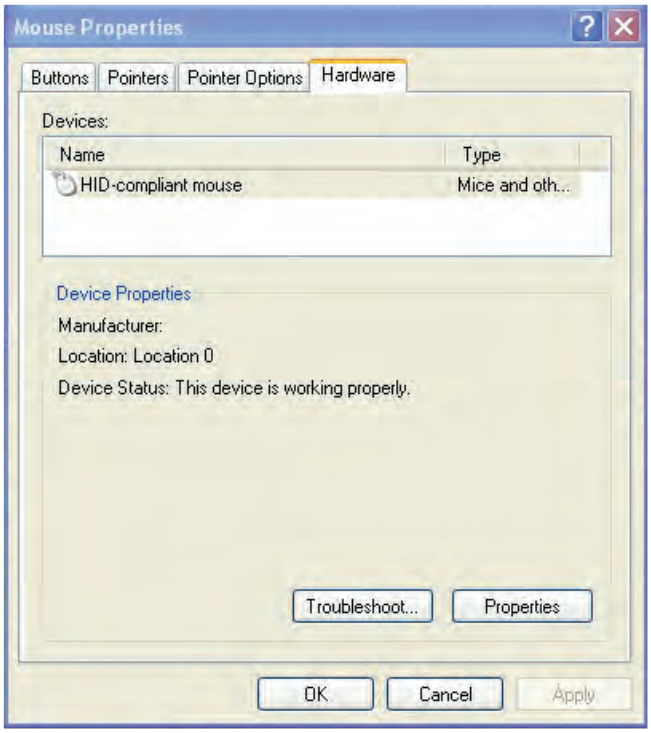

Note: The company reserves the right to change specifications without notice.

HT series

Ruggedized Hall effect joysticks

CONFIGURATION OPTIONS - continued

ADDITIONAL OUTPUT OPTIONS

DUAL DECODE

Dual Decode utilizes a microprocessor to monitor two linear opposite-ramp signals for each joystick axis and provides one proportional (0.5VDC – 4.5VDC) and one logical output accordingly. The dual inversed signals are continuously monitored and a logical signal of 0VDC is provided for over-range (>4.5VDC), under-range (<0.5VDC) and signal tracking (sum of both signals equals 4.5V +/-10%) error. A logical signal of 5.0VDC is provided for a properly functioning joystick deflected from center.

APPLICATIONS

Dual Decode provides a center detect function as well as error tracking, making it ideal for high liability, safety critical applications.

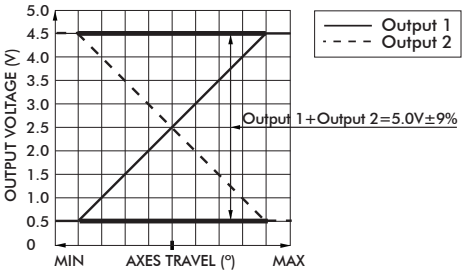

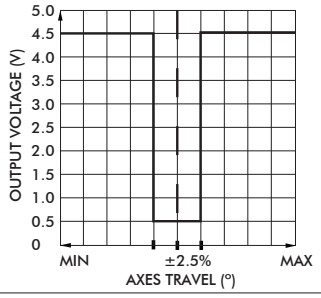

ELECTRICAL SPECIFICATIONS		
Supply Power	-	4.5VDC to 5.5VDC
Supply Current	-	30mA +10mA per axis

WIRING SPECIFICATION		
Red wire	-	Customer power supply 4.5VDC-5.5VDC
Black wire	-	Customer power supply ground
Blue wire	-	X axis output
Yellow wire	-	Y axis output
Green wire	-	Z axis output
Blue/White wire	-	X axis dual decode logic output
YellowBlack/ wire	-	Y axis dual decode logic output
Green/Black wire	-	Z axis dual decode logic output
White wire	-	Pushbutton common wire
Orange,violet,grey,brown,pink,bl/wt/y/bk,gn/bk,gy/w wire	-	Pushbutton outputs

ANALOG DEADBAND

Analog Deadband utilizes an analog circuit to monitor proportional joystick outputs and enhance return to center accuracy over multiple axes. Specified for joysticks with normally ranged outputs of 0vdc – 5vdc at full axis travel, a constant output of 2.5vdc is provided for the joystick's position +/-2.5° from center.

APPLICATIONS

Analog Deadband effectively eliminates mechanical return-to-center error, making it ideally suited for safety critical applications susceptible to drift and motion control systems lacking center position trim.

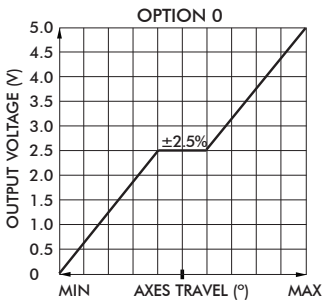

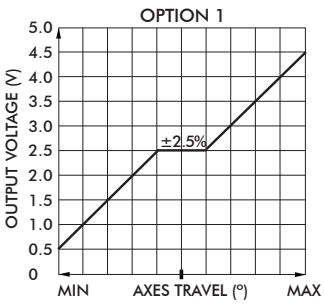

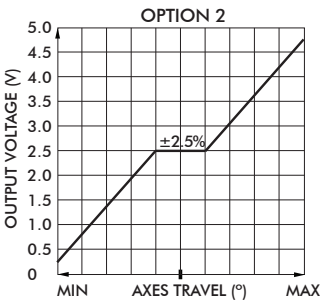

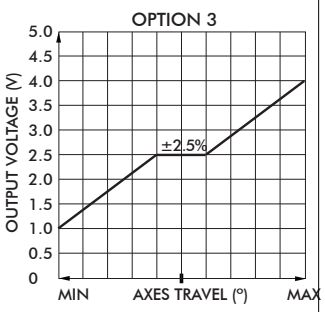

Note: The company reserves the right to change specifications without notice.

HT series

Ruggedized Hall effect joysticks

CONFIGURATION OPTIONS - continued

ADDITIONAL OUTPUT OPTIONS

ELECTRICAL SPECIFICATIONS		
Supply Power	-	4.5VDC to 5.5VDC
Supply Current	-	10mA per axis

WIRING SPECIFICATION		
Red wire	-	Customer power supply 4.5-5.5vdc
Black wire	-	Customer power supply ground
Blue wire	-	X axis output
Yellow wire	-	Y axis output
Green wire	-	Z axis output
White wire	-	Pushbutton common wire
Orange,violet,grey,brown,pink,bl/wt/y/bk,gn/bk,gy/w wire	-	Pushbutton outputs

CENTER DETECT

Center Detect utilizes a microprocessor to monitor joystick output and provides both logic and proportional signals for enhanced operator safety. Specified for a joystick normally ranged 0.5VDC to 4.5VDC, the microprocessor continuously monitors the proportional output and provides HI logic signal (5.0VDC) when moved off center and an LO logical signal (0VDC) for an over-range (>4.5VDC) or under-range (<0.5VDC).

APPLICATIONS

Center Detect is ideal for safety critical applications including master relay control "MRC" for a motion control systems or as a brake release for an overhauling load.

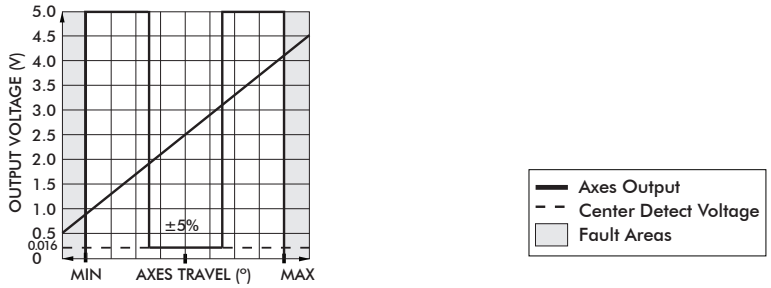

ELECTRICAL SPECIFICATIONS		
Supply Power	-	4.5V to 5.5V
Supply Current	-	30mA + 10mA per axis

WIRING SPECIFICATION		
Red Wire	-	Power supply 4.5 - 5.5VDC
Black Wire	-	Ground
Blue Wire	-	X axis output
Yellow Wire	-	Y axis output
Green Wire	-	Z axis output
Blue/White Wire	-	X axis center detect logic output
Yellow/Black Wire	-	Y axis center detect logic output
Green/Black Wire	-	Z axis center detect logic output
White Wire	-	Pushbutton common wire
Orange,violet,gray,brown,pink,bl/wt,y/bk,gn/bk,gy/w wire	-	Pushbutton outputs

Note: The company reserves the right to change specifications without notice.

HT series

Rugged finger positioning Hall effect joysticks

CONFIGURATION OPTIONS - continued

ADDITIONAL OUTPUT OPTIONS

DISCRETE OUTPUT

Discrete Output is a microprocessor based option that provides up to six hi voltage/hi current, on/off outputs as well as proportional signals. Featuring a microcontroller, an a/d converter, and four to eight optically isolated solid state switches, the Discrete Output provides an electronic "switch stick" function. Switch combinations and firing angles are programmed to the application's requirement.

APPLICATIONS

The Discrete Output option is designed for small motor, reversing starters or hydraulic solenoid actuations.

DC SPECIFICATIONS		
Supply Voltage Operating	-	5.0- 40VDC input power
Supply Current	-	30mA + 10mA per Hall sensor
Sourcing Outputs	-	70V AC/DC @ 1.6A max.
Sinking Outputs	-	70V AC/DC @ 3.6A max.
Discrete Output Max	-	60VDC/AC, 3.2A per discrete output

WIRING		
Red Wire	-	Customer power supply 5 - 40VDC
Black Wire	-	Customer power supply ground
Blue Wire	-	X axis output
Yellow Wire	-	Y axis output
Green Wire	-	Z axis output
Blue/White Wire	-	X axis discrete output
Yellow/Black Wire	-	Y axis discrete output
Green/Black Wire	-	Z axis discrete output
White Wire	-	Pushbutton common wire
Orange,violet,gray,brown,pink,bl/wt,y/bk,gn/bk,gy/w wire	-	Pushbutton outputs

I/O COMPLEMENT AND USER SPECIFIED PARAMETERS:

Up to three axis and six discrete outputs sourcing or sinking discrete outputs.

DISCRETE OUTPUT CONFIGURATION FORM:

Discrete Output	Sourcing	Sinking	AC	DC
Xfwd				
Xrev				
Yfwd				
Yrev				
Zfwd				
Zrev				

SAMPLE OF COMPLETED FORM:

(Please enter required choices for each applicable axis and return form to factory.)

Discrete Output	Sourcing	Sinking	AC	DC
Xfwd		X		X
Xrev		X		X
Yfwd	X			X
Yrev	X			X
Zfwd		X		X
Zrev		X		X

Note: The company reserves the right to change specifications without notice.

HT series

Ruggedized Hall effect joysticks

CONFIGURATION OPTIONS - continued

ADDITIONAL OUTPUT OPTIONS

VOLTAGE REGULATOR

The Voltage Regulator is a multi-wired analog option used to mate to a variety of industrial control voltages. The Voltage Regulator may be used when the supply or output voltage is greater than 5V or when bipolar output is required.

User Specified Supply Voltage:

- 5 VDC
- 10 VDC
- 12 VDC
- 24 – 30 VDC
- Custom supply options available.

User Specified Output Voltage:

- 0-5 VDC
- 0-10 VDC
- +/-5 VDC
- +/-10 VDC
- Custom outputs available.

ELECTRICAL SPECIFICATIONS		
Supply Power	-	5VDC to 30VDC
Supply Current	-	90mA max

WIRING SPECIFICATION		
Red wire	-	Supply power 5-30VDC
Black wire	-	Ground
Blue wire	-	X axis output
Yellow wire	-	Y axis output
Green wire	-	Z axis output
White wire	-	Pushbutton common wire
Orange,violet,gray,brown,pink,bl/wt/y/bk,gn/bk,gy/w wire	-	Pushbutton outputs

Note: The company reserves the right to change specifications without notice.

PEWATRON
a member of the Angst + Pfister Group

We are here for you. Addresses and Contacts

Sales Switzerland

Postcode 3000 – 9999
Liechtenstein

Matthias Rüegg
Ruhbergstrasse 32
CH-9230 Flawil

Phone + 41 44 877 35 18
Mobile + 41 76 491 66 66
Fax + 41 44 877 35 19

matthias.rueegg@pewatron.com

Postcode 1000 – 2999

Raffael Favaretto
Route d'Oron 124
CH-1673 Promasens

Phone + 41 44 877 35 22
Mobile + 41 76 444 63 14
Fax + 41 44 877 35 23

raffael.favaretto@pewatron.com

Sales Germany

Postcode 60000 – 79999

Dieter Hirthe
Mühlweg 23
D-71554 Weissach i.T.

Phone + 49 719 149 60 58
Mobile + 49 163 762 74 30
Fax + 49 719 193 31 88

dieter.hirthe@pewatron.com

Postcode 10000 – 59999
Postcode 80000 – 99999

Kurt Stritzelberger
Neumarkter Str. 86a
D-81673 Munich

Phone + 49 89 260 38 47
Mobile + 49 171 803 41 35
Fax + 49 89 43 10 91 91

kurt.stritzelberger@pewatron.com

Key Accounts
Aerospace and Defence

Claus Wübbena
Vogelkamp 26
D-26655 Westerstede

Phone + 49 4488 5204 614
Mobile + 49 173 9700 691
Fax + 49 4488 5204 616

claus.wuebbena@pewatron.com

Sales Austria

Kurt Stritzelberger
Neumarkter Str. 86a
D-81673 Munich

Phone + 49 89 260 38 47
Mobile + 49 17 18 03 41 35
Fax + 49 89 43 10 91 91

kurt.stritzelberger@pewatron.com

Sales Other Countries / Product Management

Sensors

Physical Sensors
Data Acquisition

Peter Felder
Phone + 41 44 877 35 05
peter.felder@pewatron.com

Geometrical Sensors

Eric Letsch
Phone + 41 44 877 35 14
eric.letsch@pewatron.com

Power Supplies

DC-DC Converters
Switching Power Supplies
DC-AC Inverters

Sebastiano Leggio
Phone + 41 44 877 35 06
sebastiano.leggio@pewatron.com

E-Components

Current Sensors
Man Machine Interface
Measurement Probes

Sebastiano Leggio
Phone + 41 44 877 35 06
sebastiano.leggio@pewatron.com

PEWATRON AG
Thurgauerstrasse 66
CH-8052 Zurich

Phone + 41 44 877 35 00
Fax + 41 44 877 35 25

www.pewatron.com
info@pewatron.com