CH Products

an APEM Group Company

TS series

Proportional Hall effect thumbsticks

The TS Series Thumbstick is a proportional two axes joystick in a miniature package. Featuring non-contacting Hall effect technology for long life performance, the TS Series Thumbstick is available with multiple linear output options including single and dual (redundant) outputs. It is similar in size and operation to "gamepad" controls, but in a rugged industrial package. Typical applications include pendant and remote controls as well as joystick handle and arm rest integration.

KEY FEATURES

- ❑ **1 or 2 axes**
- ❑ **USB outputs available**
- ❑ **Non-contact Hall effect technology**
- ❑ **Submersible to 1m (3.28ft) per IP68**
- ❑ **Pressure washable to IP69K**
- ❑ **Redundant outputs available**
- ❑ **Rear or drop-in mounting available**

TS series

Proportional Hall effect thumbsticks

OPTION SELECTION

TS [ ] [ ] [ ] [ ] [ ] [ ]

SERIES

HANDLE

0	None
1	Castle
2	Winged Hat
3	Conical
4	Finger Tip
A	All Handles

MOUNTING HARDWARE

N	None
D	Drop-in
R	Rear mount
A	All hardware

TERMINATION[1]

1	22AWG 25cm PTFE
2	28AWG 25cm PTFE
3	Customer specified

LIMITER

U	Single axis
S	Square
G	Guided feel
P	Plus

OUTPUT OPTIONS

00	0V to 5V (Rail to Rail)
01	0.25V to 4.75V
02	0.5V to 4.5V
03	1V to 4V
04	0V to 5V - Sensor 1 0V to 5V - Sensor 2
05	0.25V to 4.75V - Sensor 1 0.25V to 4.75V - Sensor 2
06	0.5V to 4.5V - Sensor 1 0.5V to 4.5V - Sensor 2
07	1V to 4V - Sensor 1 1V to 4V - Sensor 2
08	0V to 5V - Sensor 1 5V to 0V - Sensor 2
09	0.5V to 4.5V - Sensor 1 4.5V to 0.5V - Sensor 2
10	0.25V to 4.75V - Sensor 1 4.75V to 0.25V - Sensor 2
11	1V to 4V - Sensor 1 4V to 1V - Sensor 2
12	Customer specified
13	PWM[2]
14	USB
15	Joyball (Cursor emulation)

POWER SUPPLY OPTIONS

A	Single
B	Independent[3]

SPECIFICATIONS

MECHANICAL (FOR X, Y AXES)		
Operating Force	–	3.1N±0.5N (0.70lbf±0.11lbf)[4]
Maximum Vertical Load	–	200N (45lbf)[4]
Maximum Horizontal Load	–	150N (33.7lbf)[4]
Mechanical Angle of Movement	–	50°
Expected Life	–	1 million cycles
Mass/weight	–	18.25g ± 5.0g (0.64oz±0.18oz)
Lever Action (Centering)	–	Spring centering

ENVIRONMENTAL		
Operating Temperature	–	-40°C to +85°C (-40°F to +185°F)
Storage Temperature	–	-40°C to +85°C (-40°F to +185°F)
Sealing	–	IP68, IP69K[5]
EMC Immunity Level	–	EN61000-4-3
EMC Emissions Level	–	EN61000-6-3:2001
ESD	–	EN61000-4-2

ELECTRICAL SENSOR		
Resolution	–	1.22mV
Supply Voltage Range	–	5.00V±0.01V
Reverse Polarity Max	–	-10V
Overvoltage Max	–	20V
Output Impedance	–	2Ω
Return to Center Voltage Tolerance	–	±200mV initial

NOTES:

Mounting accessories.

Standard hardware includes:
- For the Drop-in option - 4 push in connectors, drop-in bezel and an O-ring.
- For the Rear mount option: 4x1/2 FH SS Phil Screws and a rear mount bezel.

1-1 - Wires are thick, robust, and best suited for stand alone applications.
1-2 - Wires are thin and best suited for tightly constrained wire routing.

2 Contact factory for PWM configuration.

3 Only available on dual output.

4 Force applied to the top of the castle cap.

5 All options are IP68 and IP69K rated, however Drop-in mounting does not prevent panel ingress.

- All values are nominal

Note: The company reserves the right to change specifications without notice.

TS series

Proportional Hall effect thumbsticks

DIMENSIONAL DRAWINGS

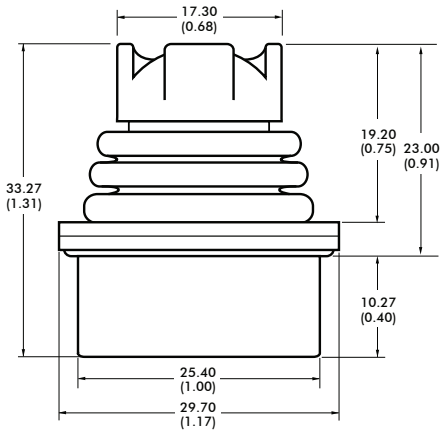

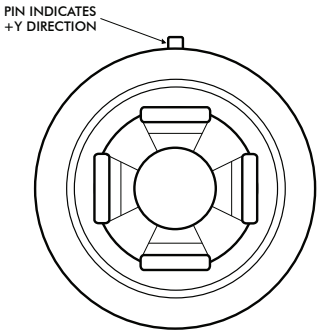

HANDLE OPTIONS

1	2	3	4
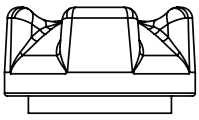	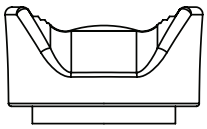	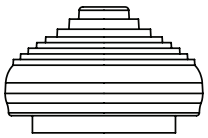	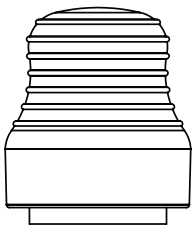

MOUNTING OPTIONS

DROP-IN OPTION CUTOUT DIMENSIONS

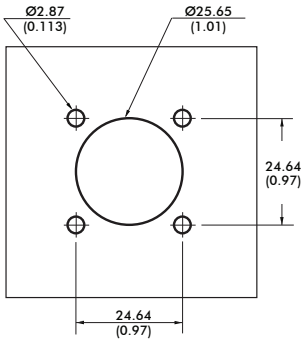

REAR MOUNT OPTION CUTOUT DIMENSIONS

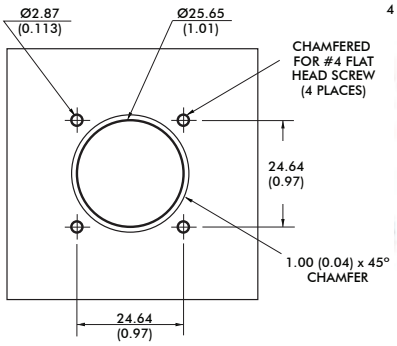

Note: Maximum panel thickness is 2.032mm (0.08in)

Note: Dimensions are in mm/(inch)

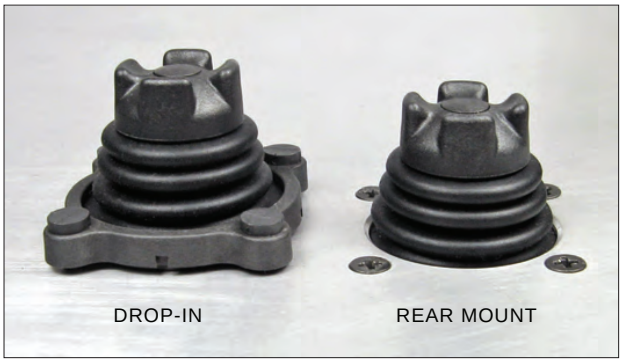

Note: The company reserves the right to change specifications without notice.

TS series

Proportional Hall effect thumbsticks

CONFIGURATION OPTIONS

LINEAR OUTPUT OPTIONS

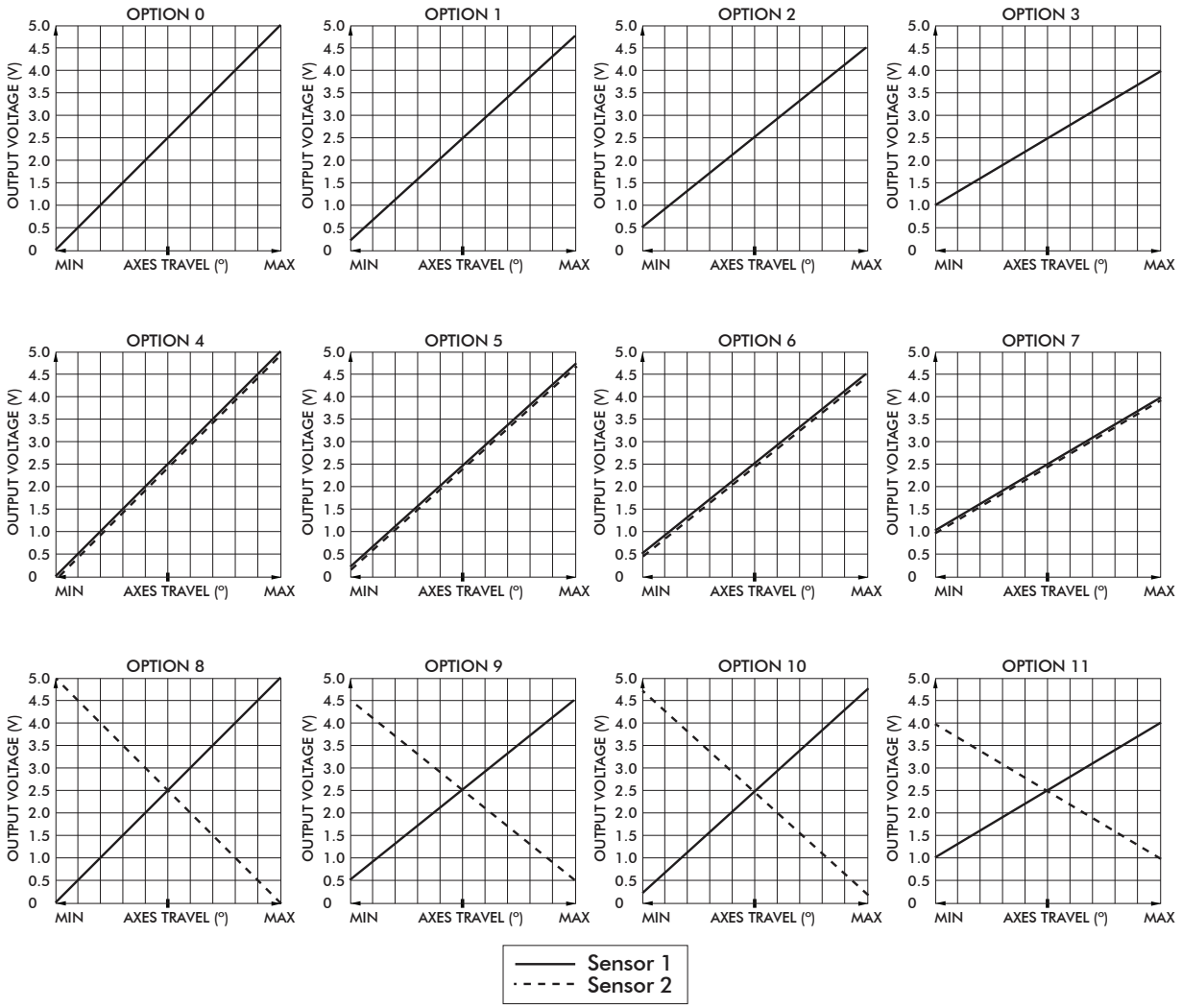

WIRING

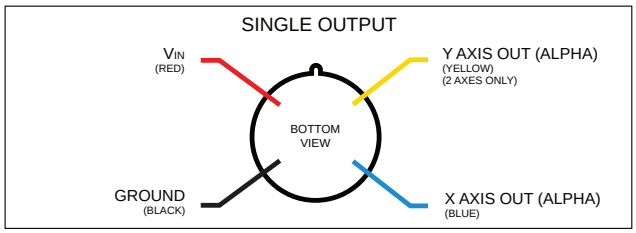

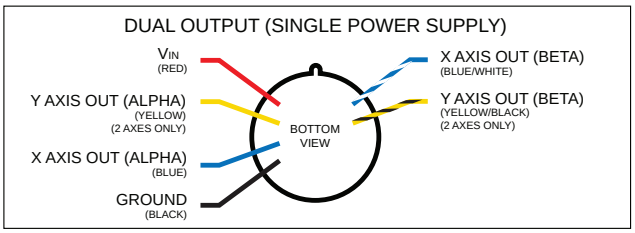

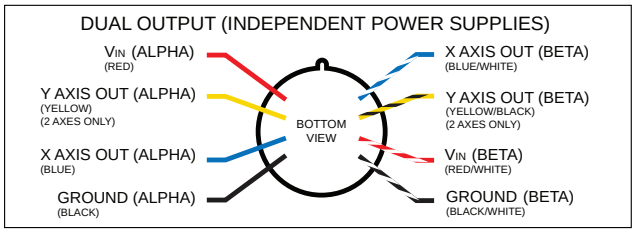

Note: The company reserves the right to change specifications without notice.

TS series

Proportional Hall effect thumbsticks

CONFIGURATION OPTIONS - continued

ADDITIONAL OUTPUT OPTIONS

PLUG-AND-PLAY SOLUTIONS:

USB

Featuring USB 1.1 HID compliant interface, CH Products' USB joysticks are recognized as standard HID "game controller" devices. Adhering to the HID specification, CH Products' USB joysticks are plug-and-play with most versions of Windows and Linux. Joystick button and axes assignments are dependent upon the controlled application.

FEATURES

- USB 1.1 HID compliant "game controller" device
- Easy to install and operate
- Functions determined by controlled application

USB Male Type A Connector

SUPPLIED WIRING

USB: USB Male Type A Connector with overmolded cable
(Optional ruggedized military connectors are available.)

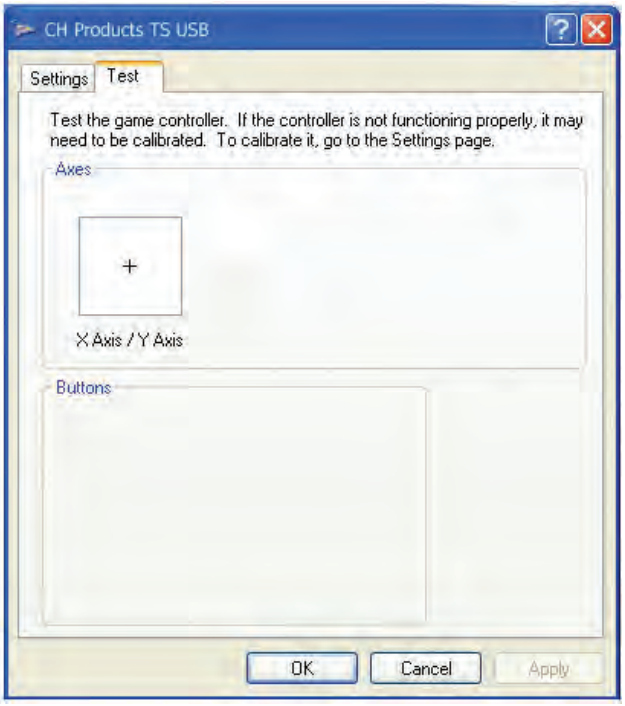

Note: The company reserves the right to change specifications without notice.

TS series

Proportional Hall effect thumbsticks

CONFIGURATION OPTIONS

ADDITIONAL OUTPUT OPTIONS

JOYBALL (CURSOR EMULATION)

The Joyball option converts multi-axis joystick ouput into a mouse, trackball, or cursor control device. The joystick's internal microprocessor converts absolute axis position into a curser velocity, which is translated as a relative trackball or mouse position. Supported protocols: USB.

APPLICATIONS

The Joyball option is ideal for vehicle applications subjected to dirt and high vibration which make operating a traditional cursor control device difficult. The Joyball option is widely used in shipboard and military applications.

FEATURES

- HID compliant "pointing device"
- Plug-and-play with USB option
- Ideal for marine GPS and navigation

SUPPLIED WIRING

USB: USB Male Type A Connector with overmolded cable.

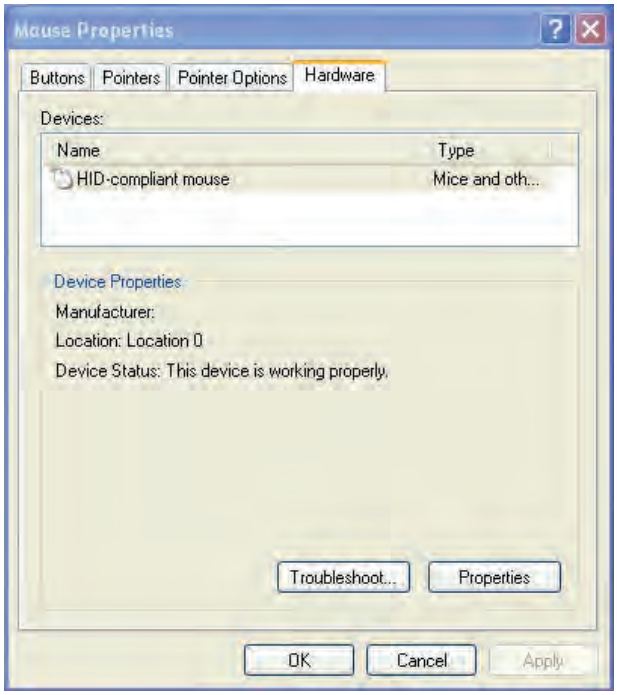

Note: The company reserves the right to change specifications without notice. The graphs are provided for representational puroses only.

PEWATRON
a member of the Angst + Pfister Group

We are here for you. Addresses and Contacts

Sales Switzerland

Postcode 3000 – 9999
Liechtenstein

Matthias Rüegg
Ruhbergstrasse 32
CH-9230 Flawil

Phone + 41 44 877 35 18
Mobile + 41 76 491 66 66
Fax + 41 44 877 35 19

matthias.rueegg@pewatron.com

Postcode 1000 – 2999

Raffael Favaretto
Route d'Oron 124
CH-1673 Promasens

Phone + 41 44 877 35 22
Mobile + 41 76 444 63 14
Fax + 41 44 877 35 23

raffael.favaretto@pewatron.com

Sales Germany

Postcode 60000 – 79999

Dieter Hirthe
Mühlweg 23
D-71554 Weissach i.T.

Phone + 49 719 149 60 58
Mobile + 49 163 762 74 30
Fax + 49 719 193 31 88

dieter.hirthe@pewatron.com

Postcode 10000 – 59999
Postcode 80000 – 99999

Kurt Stritzelberger
Neumarkter Str. 86a
D-81673 Munich

Phone + 49 89 260 38 47
Mobile + 49 171 803 41 35
Fax + 49 89 43 10 91 91

kurt.stritzelberger@pewatron.com

Key Accounts
Aerospace and Defence

Claus Wübbena
Vogelkamp 26
D-26655 Westerstede

Phone + 49 4488 5204 614
Mobile + 49 173 9700 691
Fax + 49 4488 5204 616

claus.wuebbena@pewatron.com

Sales Austria

Kurt Stritzelberger
Neumarkter Str. 86a
D-81673 Munich

Phone + 49 89 260 38 47
Mobile + 49 17 18 03 41 35
Fax + 49 89 43 10 91 91

kurt.stritzelberger@pewatron.com

Sales Other Countries / Product Management

Sensors

Physical Sensors
Data Acquisition

Peter Felder
Phone + 41 44 877 35 05
peter.felder@pewatron.com

Geometrical Sensors

Eric Letsch
Phone + 41 44 877 35 14
eric.letsch@pewatron.com

Power Supplies

DC-DC Converters
Switching Power Supplies
DC-AC Inverters

Sebastiano Leggio
Phone + 41 44 877 35 06
sebastiano.leggio@pewatron.com

E-Components

Current Sensors
Man Machine Interface
Measurement Probes

Sebastiano Leggio
Phone + 41 44 877 35 06
sebastiano.leggio@pewatron.com

PEWATRON AG
Thurgauerstrasse 66
CH-8052 Zurich

Phone + 41 44 877 35 00
Fax + 41 44 877 35 25

www.pewatron.com
info@pewatron.com