CH Products

an APEM Group Company

FG series

FIXED GRIP™ hand controllers

The FG Series of FIXED GRIP hand controllers provide rugged, yet ergonomic operation for the most demanding applications. Custom configured to order, the FG Series may be equipped, for example, with a miniature thumb operated two axes joystick, index trigger guard, and USB interface. The FG Series of FIXED GRIP controllers are ideal for off-road vehicle, marine, and military applications subject to high vibration.

KEY FEATURES

- ❑ **USB outputs available**
- ❑ **Rugged hand operation**
- ❑ **Sealed up to IP67**
- ❑ **Custom configured**
- ❑ **Available with optional programming utility**

FG series

FIXED GRIP™ hand controllers

OPTION SELECTION

FG [ ] [ ] [ ] [ ] [ ] [ ] [ ] [ ]

SERIES

HANDLE

1	Oval

INDEX TRIGGER

N	None
M	Momentary
P	Proportional[1]
D	DP/DT[2]

INDEX TRIGGER GUARD

1	None
2	Red
3	Black

DEADMAN LEVER

1	None
2	Proximity sensor[3]

MOUNTING HARDWARE

1	None
2	Plate and screws

TERMINATION

A	22AWG 10in PTFE
B	28AWG 10in PTFE
X	Customer specified

ELECTRICAL OUTPUT OR INTERFACE

1	Voltage output
2	USB
3	CANbus
4	Joyball

SEALING

A	None
B	IP67

NOTES:

1 0.5V to 4.5V output

2 Double pole/double throw

3 Not available with trigger

Up to IP67 available.

Mounting accessories. Screws: 1/4-20 x 1.25in stainless steel screws, lock washers, and hex nuts

SPECIFICATIONS

ENVIRONMENTAL		
Operating Temperature	–	-25°C to 85°C (-13°F to 185°F)
Storage Temperature	–	-40°C to 85°C (-40°F to 185°F)
Sealing	–	IP67
EMC Immunity Level (V/M)	–	IEC 61000-4-8:2009
EMC Emissions Level	–	IEC 61000-4-3:2006
ESD	–	IEC 61000-4-2:2008

STANDARD SWITCH CHARACTERISTICS/RATINGS		
Electrical Resistive Load:	–	5A
Electrical Inductive Load:	–	3A
Dielectric Withstandind Voltage:	–	1050Vrms
Low Level:	–	10mA @ 30mV
Electrical Life:	–	25,000 cycles 5A @ 28VDC resistive snap-action
Mechanical Life:	–	1,000,000 cycles
Environmental Seal:	–	IP67
Action:	–	Momentary, snap-action
Operating Force:	–	7.5N+/-2.0N (1.69lbf+/-0.11lb)
Total Travel:	–	0.080 inch max
Over Travel:	–	0.010 inch min

NOTE:
All values are nominal

Note: The company reserves the right to change specifications without notice.

FG series

FIXED GRIP™ hand controllers

FACEPLATE EXAMPLES

OVAL

HANDLE / INDEX TRIGGER

INDEX TRIGGER WITH TRIGGER GUARD | INDEX TRIGGER | NO INDEX TRIGGER

Note: The company reserves the right to change specifications without notice.

FG series

FIXED GRIP™ hand controllers

DIMENSIONAL DRAWINGS

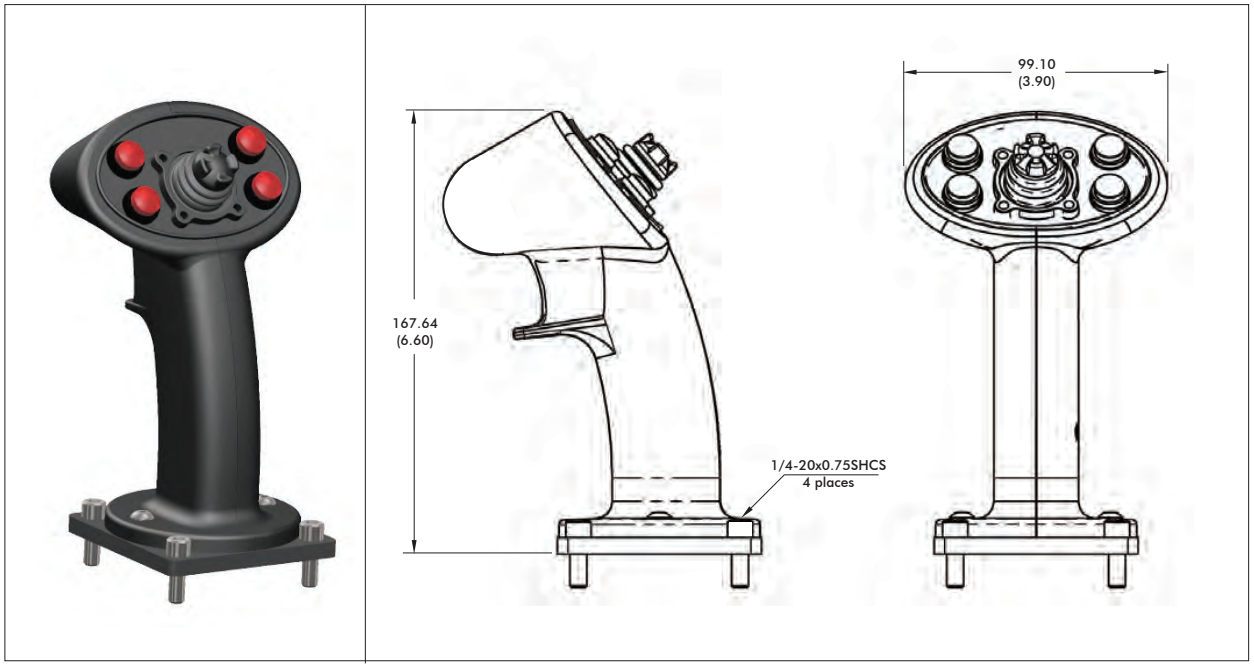

NOTES

1. Dimensions are in mm/(inch)
2. Faceplate

   The FG FIXED GRIP hand controller features a modular faceplate that can be customized for specific applications. Ambidextrous for most configurations, the faceplate may be populated with a variety of thumb actuated switches including momentary pushbuttons, latching pushbuttons, two or three way toggle switches, 4 or 5 way trims, and miniature proportional joysticks. Every FG faceplate is custom configured to order. Please consult factory for options.
3. Index Trigger

   The FG Series handle may be equipped with or without in index trigger switch. Index trigger configure options include a single pole normally open momentary switch, a double pole double throw tactile switch, or a proportional Hall effect device.

   Index Trigger Options

   N: None
   M: Momentary, single pole normally open
   P: Hall effect, 0.5V to 4.5V proportional output
   D: Double pole, double throw
4. Deadman Lever

   The Proximity Sensor is a person present "deadman" safety switch that works by means of capacitive sensing. Fitted inside the handle and sealed from the environment, the Proximity Sensor eliminates the need for a mechanical paddle lever.

   Deadman Lever Option

   1: None
   2: Proximity Sensor

Note: The company reserves the right to change specifications without notice.

FG series

FIXED GRIP™ hand controllers

CONFIGURATION OPTIONS - continued

OUTPUT OPTIONS

PLUG-AND-PLAY SOLUTIONS:

USB

Featuring USB 1.1 HID compliant interface, CH Products' USB FIXED GRIP controllers are recognized as standard HID "game controller" devices. Adhering to the HID specification, CH Products' USB FIXED GRIP controllers are plug-and-play with most versions of Windows and Linux. FIXED GRIP controller's buttons and axes assignments are dependent upon the controlled application.

FEATURES

- USB 1.1 HID compliant "game controller" device
- Easy to install and operate
- Functions determined by controlled application
- Standard male type "A" connector

USB Male Type A Connector

SUPPLIED WIRING

USB: USB Male Type A Connector with over-molded cable
(Optional ruggedized military connectors are available.)

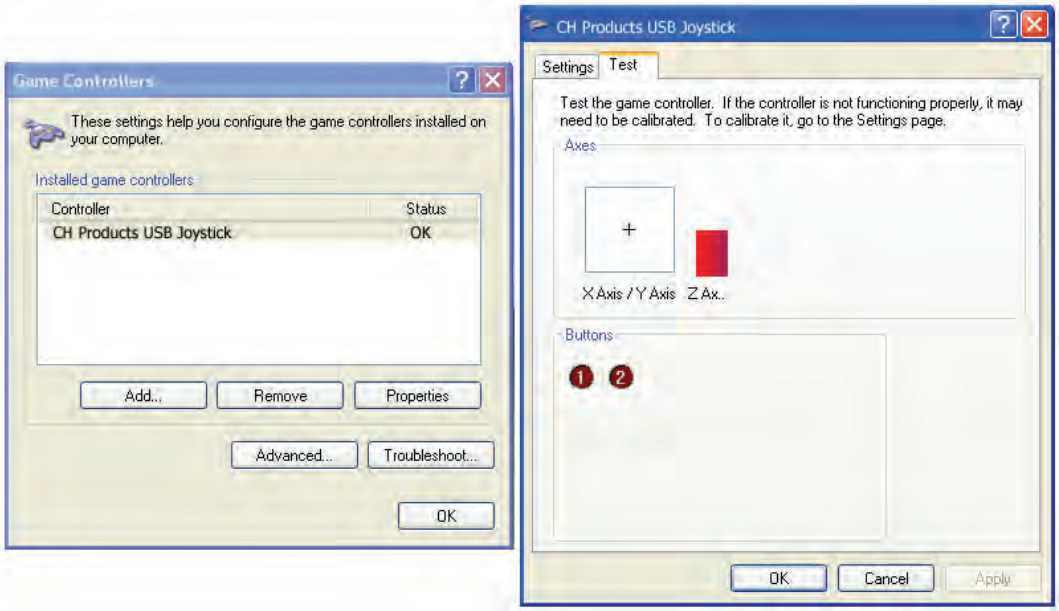

Note: The company reserves the right to change specifications without notice.

FG series

FIXED GRIP™ hand controllers

CONFIGURATION OPTIONS - continued

ADDITIONAL OUTPUT OPTIONS

JOYBALL (CURSOR EMULATION)

The Joyball option converts multi-axis joystick ouput into a mouse, trackball, or cursor control device. The FIXED GRIP controller's internal microprocessor converts absolute axis position into a curser velocity, which is translated as a relative trackball or mouse position. Supported protocols include Sun Microsystems (mouse systems 5vdc serial) and USB.

APPLICATIONS

The Joyball option is ideal for vehicle applications subjected to dirt and high vibration which make operating a traditional cursor control device difficult. The Joyball option is widely used in shipboard and military applications.

FEATURES

- HID compliant "pointing device"
- Plug-and-play with USB option
- Ideal for marine GPS and navigation
- Environmental sealing up to IP67

SUPPLIED WIRING

USB: USB Male Type A Connector with over-molded cable
SUN: SUN mini-DIN plug with overmolded cable and strain relief

I/O COMPLEMENT/ USER SPECIFIED PARAMETERS:

- USB 4 pushbuttons 2 or 3 axes (X,Y, and Z "scroll")
- SUN 2 pushbuttons and 2 axes (X, Y)

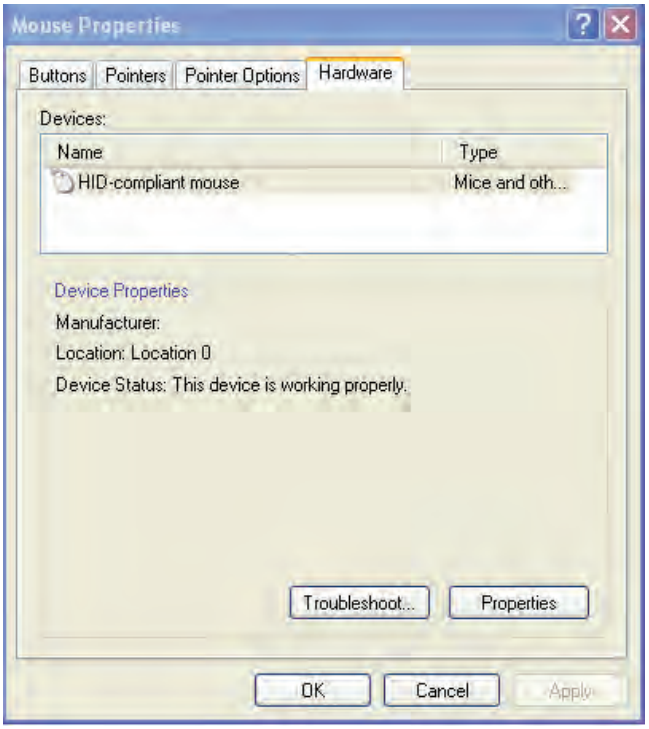

Note: The company reserves the right to change specifications without notice.

FG series

FIXED GRIP™ hand controllers

CONFIGURATION OPTIONS

ADDITIONAL OUTPUT OPTIONS

CANbus J1939

CH Products FG CANbus joysticks conform to the SAE J1939 serial bus specification used for communications between electronic control units and vehicle components.

FEATURES

- CANbus J1939
- Extended I/O extension for up to 2 digital and 3 analog inputs.
- Accommodates a 6-40VDC power supply

ELECTRICAL SPECIFICATIONS		
Supply Power:	-	6 – 40 VDC
Supply Current:	-	15mA min, +5mA per LED, +6mA per axis

WIRING SPECIFICATION		
Red Wire	-	Supply Power
Black Wire	-	Ground
Green Wire	-	CAN high data
White Wire	-	CAN low data
Blue Wire	-	Identifier Select
Orange Wire	-	Identifier Select

CONNECTOR OPTIONS:

- Cable assembly with Deutsch DT04 style plugs
- External I/O harnessing per customer specification

CANbus CONFIGURATION CHART

- Contact factory for assistance

BAUD RATE (Check one)			250K		500K		1000K										BLUE WIRE	ORANGE WIRE
11 BIT IDENTIFIER (CAN2.0A) (Hex)	#1	TX	1		0												G	G
		RX																
	#2	TX																G
		RX																
	#3	TX															G	
		RX																
	#4	TX																
		RX																
29 BIT IDENTIFIER (CAN2.0B) (Hex)	#1	TX	3		2		1		0								G	G
		RX																
	#2	TX																G
		RX																
	#3	TX															G	
		RX																
	#4	TX																
		RX																
8 BYTE TX DATA FRAME (Binary)			7		6		5		4		3		2		1		0		IDENTIFIER SELECT WIRES (SUPPLIED IN PIGTAIL) G=TIED TO 0V (BLACK WIRE)
8 BYTE RX DATA FRAME (Binary)																		
AXIS DATA TYPE (Check one)			SIGNED CHAR (+/-127)		UNSIGNED CHAR (0-255)		UNSIGNED INT (0-1023)		UNSIGNED INT (0-4095)									

Note: The company reserves the right to change specifications without notice.

PEWATRON
a member of the Angst + Pfister Group

We are here for you. Addresses and Contacts

Sales Switzerland

Postcode 3000 – 9999
Liechtenstein

Matthias Rüegg
Ruhbergstrasse 32
CH-9230 Flawil

Phone + 41 44 877 35 18
Mobile + 41 76 491 66 66
Fax + 41 44 877 35 19

matthias.rueegg@pewatron.com

Postcode 1000 – 2999

Raffael Favaretto
Route d'Oron 124
CH-1673 Promasens

Phone + 41 44 877 35 22
Mobile + 41 76 444 63 14
Fax + 41 44 877 35 23

raffael.favaretto@pewatron.com

Sales Germany

Postcode 60000 – 79999

Dieter Hirthe
Mühlweg 23
D-71554 Weissach i.T.

Phone + 49 719 149 60 58
Mobile + 49 163 762 74 30
Fax + 49 719 193 31 88

dieter.hirthe@pewatron.com

Postcode 10000 – 59999
Postcode 80000 – 99999

Kurt Stritzelberger
Neumarkter Str. 86a
D-81673 Munich

Phone + 49 89 260 38 47
Mobile + 49 171 803 41 35
Fax + 49 89 43 10 91 91

kurt.stritzelberger@pewatron.com

Key Accounts
Aerospace and Defence

Claus Wübbena
Vogelkamp 26
D-26655 Westerstede

Phone + 49 4488 5204 614
Mobile + 49 173 9700 691
Fax + 49 4488 5204 616

claus.wuebbena@pewatron.com

Sales Austria

Kurt Stritzelberger
Neumarkter Str. 86a
D-81673 Munich

Phone + 49 89 260 38 47
Mobile + 49 17 18 03 41 35
Fax + 49 89 43 10 91 91

kurt.stritzelberger@pewatron.com

Sales Other Countries / Product Management

Sensors

Physical Sensors
Data Acquisition

Peter Felder
Phone + 41 44 877 35 05
peter.felder@pewatron.com

Geometrical Sensors

Eric Letsch
Phone + 41 44 877 35 14
eric.letsch@pewatron.com

Power Supplies

DC-DC Converters
Switching Power Supplies
DC-AC Inverters

Sebastiano Leggio
Phone + 41 44 877 35 06
sebastiano.leggio@pewatron.com

E-Components

Current Sensors
Man Machine Interface
Measurement Probes

Sebastiano Leggio
Phone + 41 44 877 35 06
sebastiano.leggio@pewatron.com

PEWATRON AG
Thurgauerstrasse 66
CH-8052 Zurich

Phone + 41 44 877 35 00
Fax + 41 44 877 35 25

www.pewatron.com
info@pewatron.com