CH Products

an APEM Group Company

HFX series I

First generation Hall effect joysticks

The HFX Series I Joystick is designed for precision finger operated applications requiring proportional control and long trouble-free life. Featuring non-contacting Hall effect technology for three million lifecycle performance, the HFX Series I may be specified as a one, two, or three axes joystick. Featuring CH Products' core Hall effect technology and patented joystick mechanism, the HFX Series I has been field tested and proven for more than a dozen years. The HFX Series I joystick's compact size, low operational force and high reliability make it ideally suited for clean environment applications including coordinate measuring machines, CCTV equipment and broadcast camera control.

KEY FEATURES

- ❑ **Hall effect technology**
- ❑ **Precision analog control**
- ❑ **One, two, or three axes operation**
- ❑ **Range of fingertip handle options**
- ❑ **Rated for 3 million lifecycles**
- ❑ **Sealing up to IP68 above panel**
- ❑ **Available with USB 1.1 "Game Controller" interface**

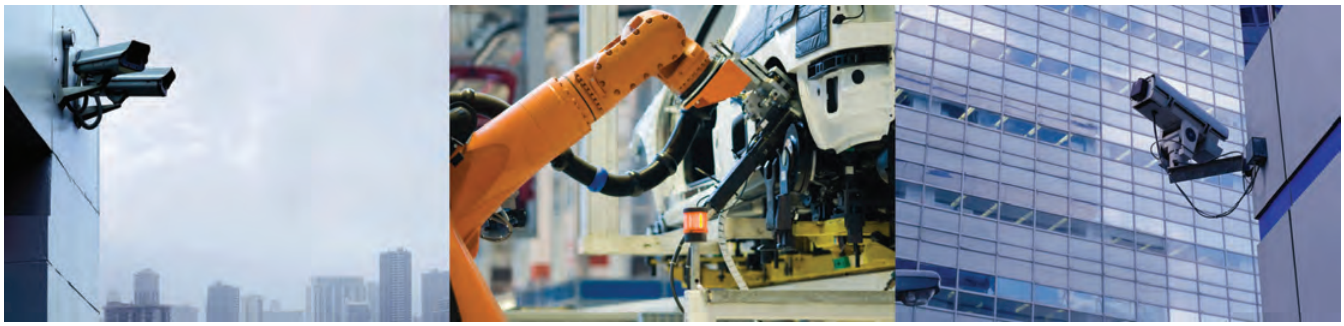

HFX series I

First generation Hall effect joysticks

OPTION SELECTION

HFX [ ] [ ] [ ] [ ] [ ]

SERIES

LIMITER PLATE

S	Square
R	Round
X	Slotted
Y	Slotted
P	Plus
C	Cross

OUTPUT OPTIONS

0	0V to 5V (Rail to Rail)
1	0.5V to 4.5V
2	0.25V to 4.75V
3	1V to 4V
4	0.25V to 4.75V - Sensor 1 0.25V to 4.75V - Sensor 2
5	0.5V to 4.5V - Sensor 1 0.5V to 4.5V - Sensor 2
6	1V to 4V - Sensor 1 1V to 4V - Sensor 2
7	0.25V to 4.75V - Sensor 1 4.75V to 0.25V - Sensor 2
8	0.5V to 4.5V - Sensor 1 4.5V to 0.5V - Sensor 2
9	1V to 4V - Sensor 1 4V to 1V - Sensor 2
0-U	USB
0-V	Voltage Regulator
1-J	Cursor Emulation

HANDLE

-10	Ball Tip (2 Axes)
-11	Tapered (2 Axes)
-22	1 Pushbutton (2 Axes)
-27	1 Sealed Pushbutton (2 Axes)
-33	3 Axes
-44	1 Pushbutton (3 Axes)
-45	2 Pushbuttons (3 Axes)
-36	Low Profile (3 Axes)

MOUNTING

0	Flush
1	Drop-in
2	Raised
3	Snap-on
4	Rear Mount

ADDITIONAL OPTIONS

-D	Dual Decode[1]
-E	Environmental Sealing
-F	Friction Clutch[2]
-AD	Analog Deadband
-DC	Center Detect[3]

NOTES

1. Dual Decode cannot be used with USB or Voltage Regulator. Dual Decode requires Output Option 8.
2. Friction Clutch requires limiter plates R, X, or Y.
3. Center Detect requires output Option 1.

Up to IP68 available.

Mounting accessories. Standard hardware includes: gasket, clamping ring, and four 40-3/4Phil Ph MS SS screws.

Note: The company reserves the right to change specifications without notice.

HFX series I

First generation Hall effect joysticks

SPECIFICATIONS

MECHANICAL (FOR X, Y AXES)		
Break Out Force	–	1.3N (0.3lbf)
Operating Force	–	2.8N (0.63lbf)
Maximum Applied Force	–	200N (45.00lbf)
Mechanical Angle of Movement	–	36° (±18°)
Expected Life	–	3 million cycles
Material	–	Glass filled nylon
Lever Action	–	Single spring omnidirectional

MECHANICAL (FOR Z AXIS)		
Break Out Torque	–	0.09N·m (0.80lbf·in)
Operating Torque	–	0.121N·m (1.07lbf·in)
Maximum Allowable Torque	–	0.150N·m (1.33lbf·in)
Hand Mechanical Angle	–	60° (±30°)
Handle Action	–	Spring centering, rotational
Expected Life	–	3 million cycles

ENVIRONMENTAL		
Operating Temperature	–	-25°C to 70°C (-13°F to 158°F)
Storage Temperature	–	-40°C to 70°C (-40°F to 158°F)
Sealing (IP)	–	IP65 to IP68*
EMC Immunity Level (V/M)	–	IEC 61000-4-3: 2006
EMC Emissions Level	–	IEC 61000-4-8: 1993/A1: 2000
ESD	–	IEC 61000-4-2: 2008

ELECTRICAL		
Sensor	–	Hall effect
Resolution	–	Infinite
Supply Voltage Operating	–	5.00VDC
Reverse Polarity Max	–	–14.5VDC
Overvoltage Max	–	18VDC
Output Voltage	–	See options
Output Impedance	–	6Ω
Current Consumption Max	–	10mA per axis
Return to Center Voltage (No Load)	–	±200mV
Output Ramp	–	See options

NOTES:

- All values are nominal
- Exact specifications may be subject to configuration.
  Contact Technical Support for the performance of your specific configuration.

* Excludes some handle options

Note: The company reserves the right to change specifications without notice.

HFX series I

First generation Hall effect joysticks

DIMENSIONAL DRAWINGS

10

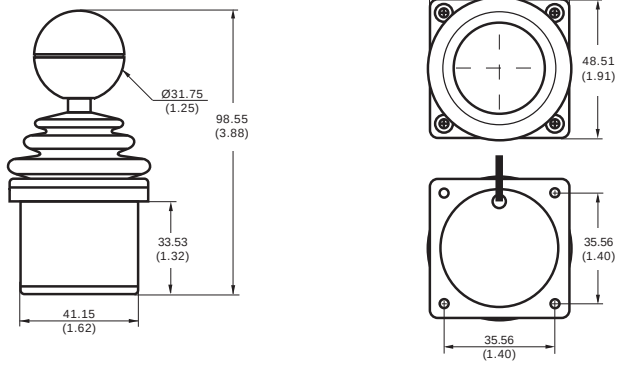

11

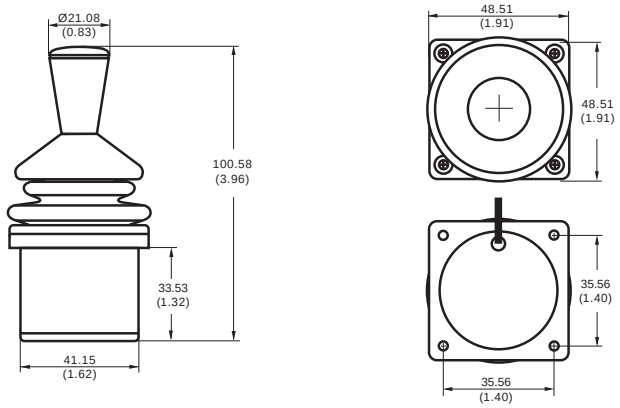

22, 27

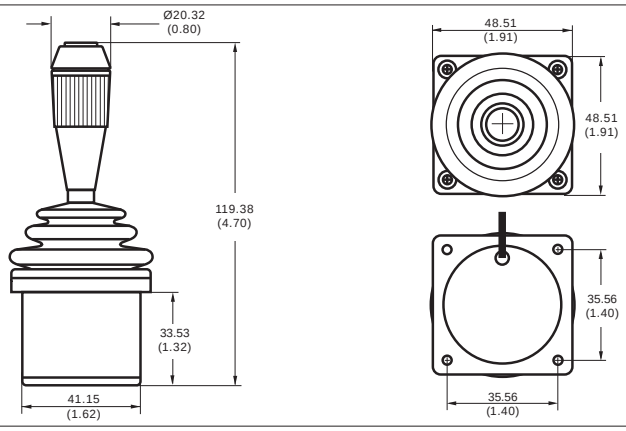

33

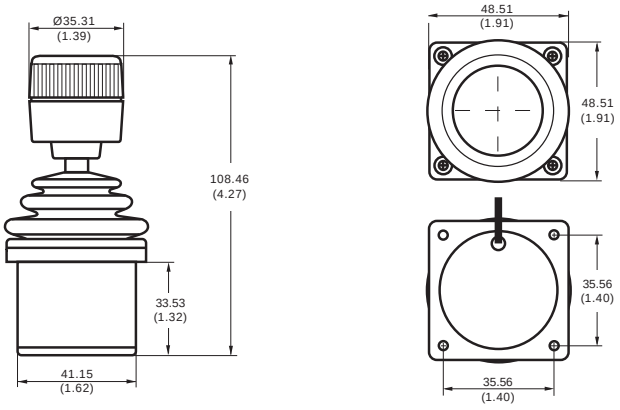

Note: The company reserves the right to change specifications without notice.

HFX series I

First generation Hall effect joysticks

DIMENSIONAL DRAWINGS

44

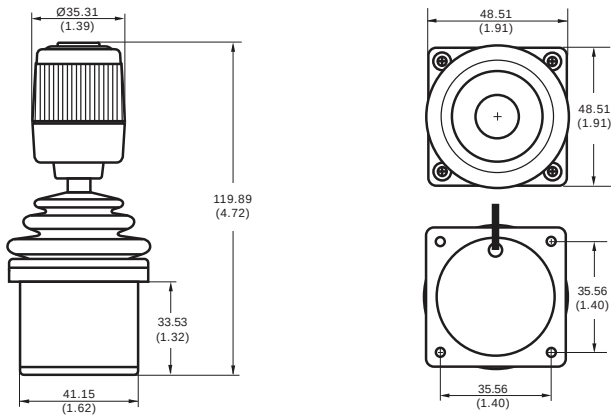

45

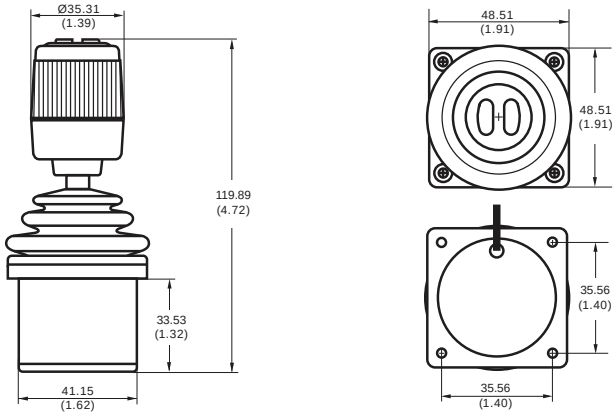

36

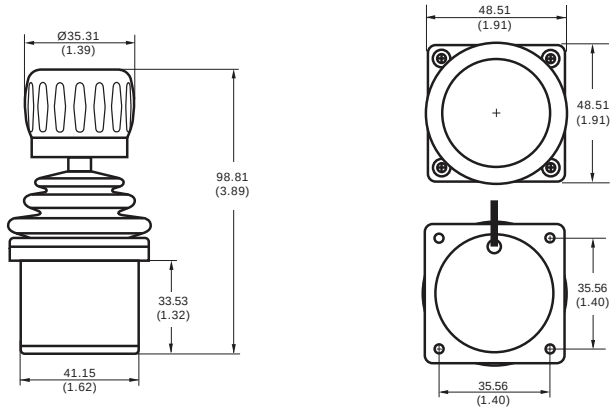

NOTES:

1. Dimensions are in mm/(inch).
2. Depth below panel increases by 10mm (0.394in) for USB, Voltage Regulator, Dual Decode, Analog Deadband, and Center Detect Output Options.
3. Axes orientation:

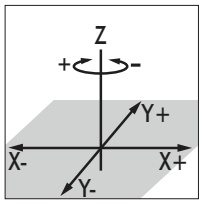

DEFAULT WIRE COLOR CODE*		
COLOR	FUNCTION	AWG
RED	Vcc or Vdd	28
BLACK	Ground	
BLUE	X Axis	
YELLOW	Y Axis	
GREEN	Z Axis	
WHITE	Switch Common (optional)	22
ORANGE	Switch 1 (optional)	
VIOLET	Switch 2 (optional)	

* - Starting from the strain relief, the leads are 178mm (7in) long, 3.18mm (0.125in) stripped.

Note: The company reserves the right to change specifications without notice.

HFX series I

First generation Hall effect joysticks

DIMENSIONAL DRAWINGS - continued

PANEL CUTOUT DIMENSIONS

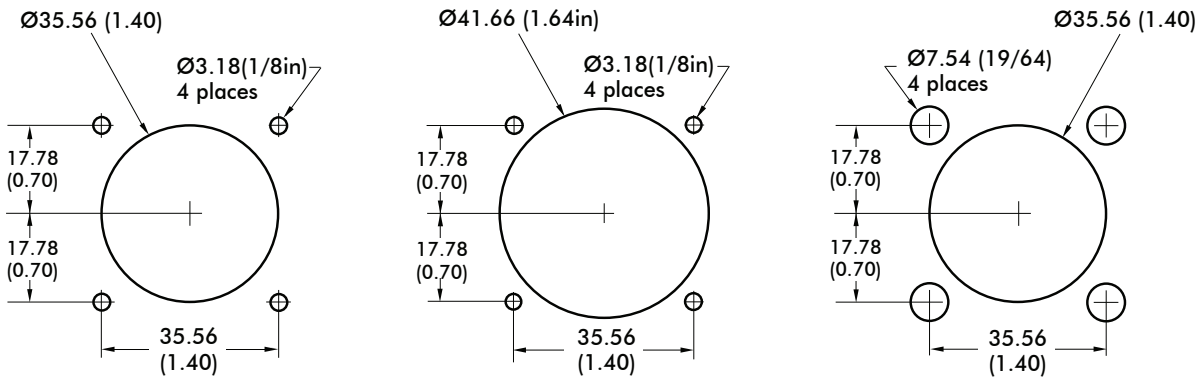

FLUSH MOUNT *

DROP-IN, RAISED, SNAP-ON
REAR MOUNT OPTION B

REAR MOUNT OPTION A **

* Not available for Option 11 Handle

** Available only for Option 10, 22, and 27 Handles

MOUNTING OPTIONS

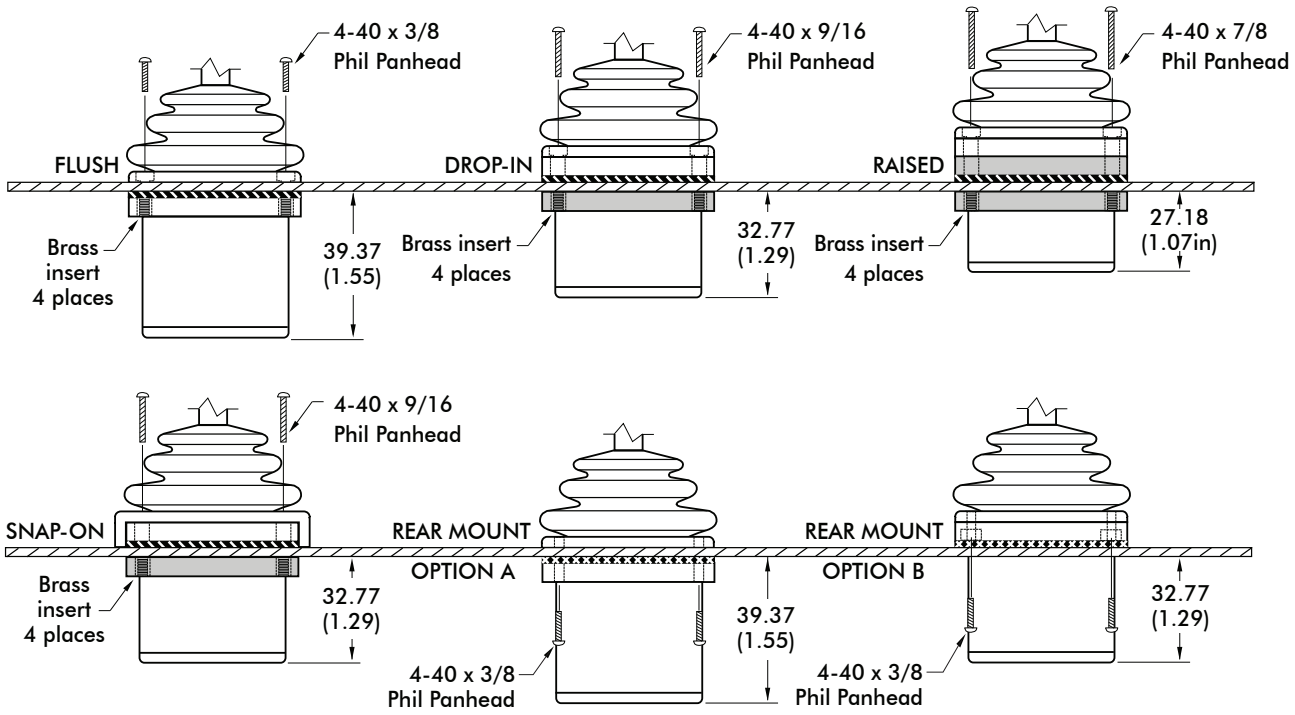

- Panel
- 6mm spacer (0.24in)
- Standard gasket
- Rear mount gasket

NOTES:

- Dimensions are in mm/(inch).
- The panel thickness can be 0.046in to 0.125in (1.17mm to 3.17mm), except for the Rear Mount Option A, where the maximum panel thickness is 1.6mm (0.063in).
- A panel thickness of 1/16" (0.063in, 1.6mm) was considered for all the below-panel depth values.
- The below-panel depth is extended by 0.40in (10.15mm) with the USB option.

Note: The company reserves the right to change specifications without notice.

HFX series I

First generation Hall effect joysticks

CONFIGURATION OPTIONS

LINEAR OUTPUT OPTIONS

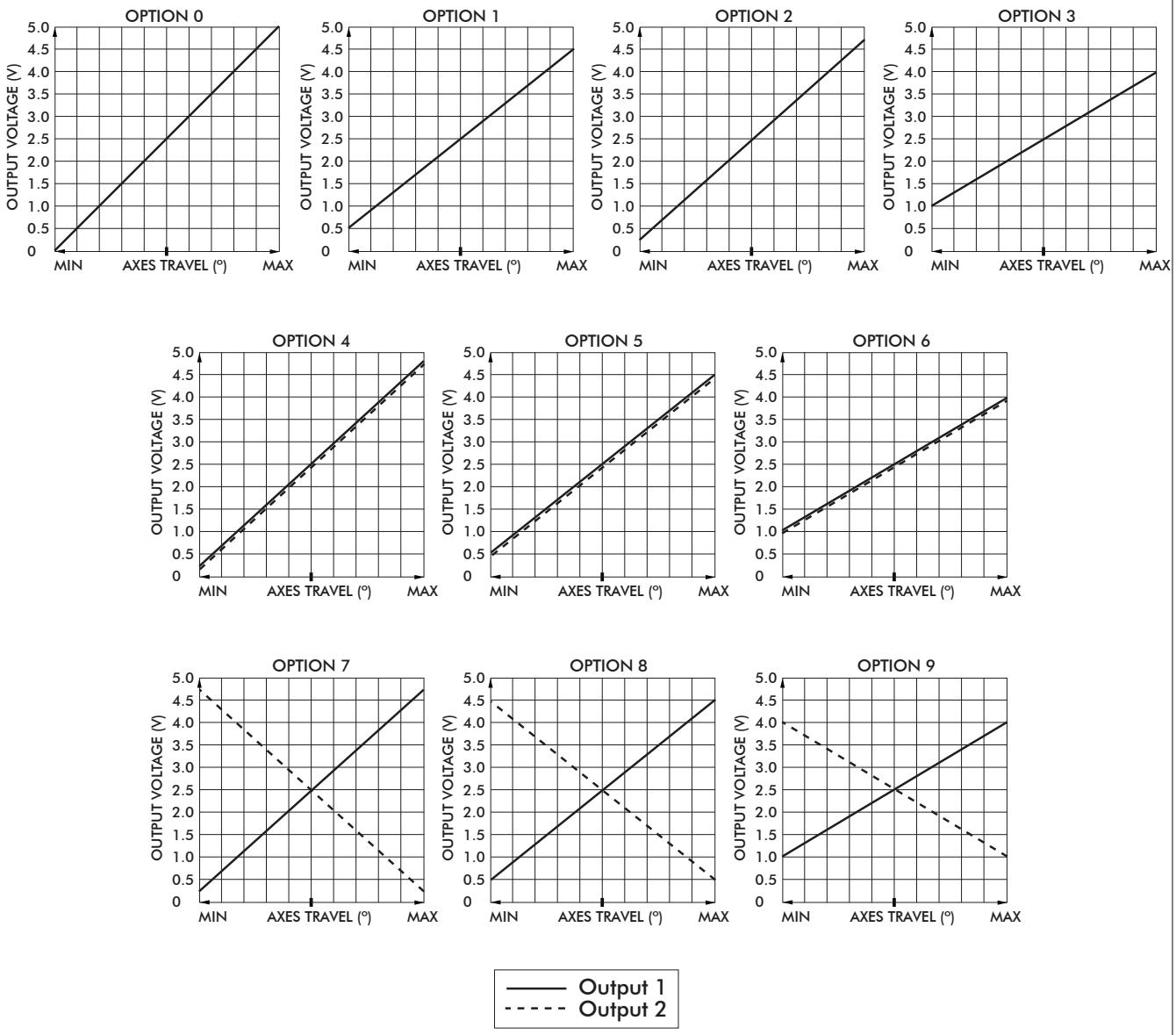

Note: The company reserves the right to change specifications without notice.

HFX series I

First generation Hall effect joysticks

CONFIGURATION OPTIONS - continued

ADDITIONAL OUTPUT OPTIONS

PLUG-AND-PLAY SOLUTIONS:

USB

Featuring USB 1.1 HID compliant interface, CH Products' USB joysticks are recognized as standard HID "game controller" devices. Adhering to the HID specification, CH Products' USB joysticks are plug-and-play with most versions of Windows and Linux. Joystick button and axes assignments are dependent upon the controlled application.

FEATURES

- USB 1.1 HID compliant "game controller" device
- Easy to install and operate
- Functions determined by controlled application
- Standard Male Type A Connector

USB Male Type A Connector

SUPPLIED WIRING

- USB Male Type A Connector with overmolded cable (Optional ruggedized military connectors are available.)
- The HFX Series I USB joysticks are shipped with a standard USB cable of 7 feet. Cables of 14 feet are also available. Please mention the desired length at order entry.

Note: The company reserves the right to change specifications without notice.

HFX series I

First generation Hall effect joysticks

CONFIGURATION OPTIONS - continued

ADDITIONAL OUTPUT OPTIONS

PLUG-AND-PLAY SOLUTIONS:

JOYBALL (CURSOR EMULATION)

The Joyball option converts multi-axis joystick output into a mouse, trackball, or cursor control device. The joystick's internal microprocessor converts absolute axis position into a curser velocity, which is translated as a relative trackball or mouse position. Supported protocols include Sun Microsystems (mouse systems 5vdc serial) and USB.

APPLICATIONS

The Joyball option is ideal for vehicle applications subjected to dirt and high vibration which makes operating a traditional cursor control device difficult. The Joyball option is widely used in shipboard and military applications.

FEATURES

- HID compliant "pointing device"
- Plug-and-play with USB option
- Ideal for marine GPS and navigation
- Environmental sealing up to IP68

SUPPLIED WIRING

USB: USB Male Type A Connector with overmolded cable
SUN: SUN mini-DIN plug with overmolded cable and strain relief

I/O COMPLEMENT/ USER SPECIFIED PARAMETERS:

- USB 4 pushbuttons 2 or 3 axes (X, Y, and Z "scroll")
- SUN 2 pushbuttons and 2 axes (X, Y)

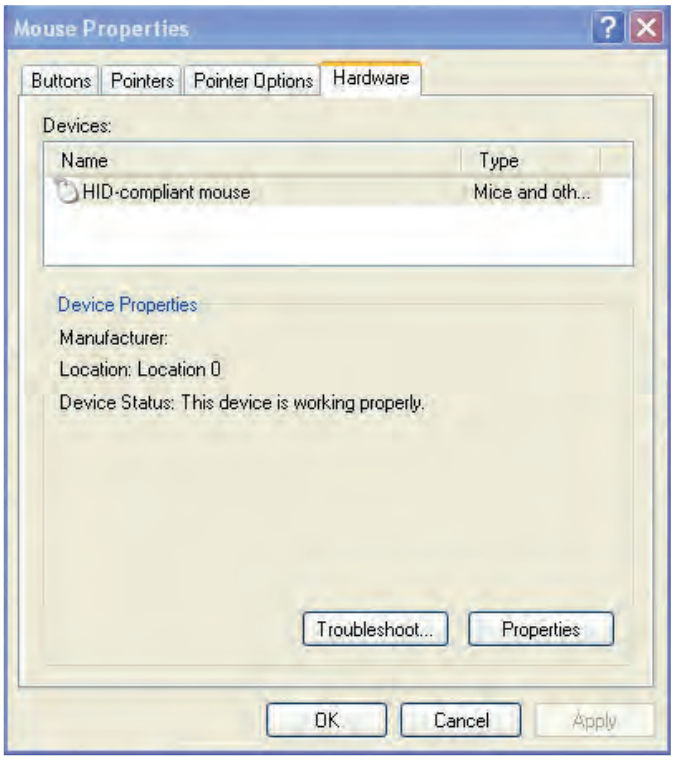

Note: The company reserves the right to change specifications without notice.

HFX series I

First generation Hall effect joysticks

CONFIGURATION OPTIONS - continued

ADDITIONAL OUTPUT OPTIONS

DUAL DECODE

Dual Decode utilizes a microprocessor to monitor two linear opposite-ramp signals for each joystick axis and provides one proportional (0.5VDC – 4.5VDC) and one logical output accordingly. The dual inversed signals are continuously monitored and a logical signal of 0VDC is provided for over-range (>4.5VDC), under-range (<0.5VDC) and signal tracking (sum of both signals equals 4.5V +/-10%) error. A logical signal of 5.0VDC is provided for a properly functioning joystick deflected from center.

APPLICATIONS

Dual Decode provides a center detect function as well as error tracking, making it ideal for high liability, safety critical applications.

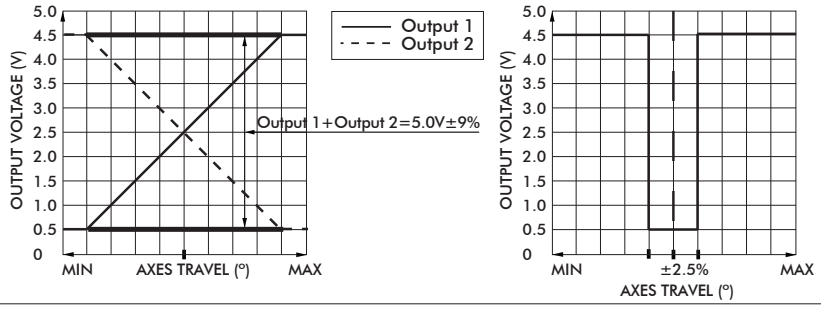

ELECTRICAL SPECIFICATIONS		
Supply Power	-	4.5VDC to 5.5VDC
Supply Current	-	30mA +10mA per axis

WIRING SPECIFICATION		
Red wire	-	Customer power supply 4.5VDC-5.5VDC
Black wire	-	Customer power supply ground
Blue wire	-	X axis output
Yellow wire	-	Y axis output
Green wire	-	Z axis output
Blue/White wire	-	X axis dual decode logic output
Yellow/Black wire	-	Y axis dual decode logic output
Green/Black wire	-	Z axis dual decode logic output
White wire	-	Pushbutton common wire
Orange,violet,grey,brown,pink,bl/wt/y/bk,gn/bk,gy/w wire	-	Pushbutton outputs

ANALOG DEADBAND

Analog Deadband utilizes an analog circuit to monitor proportional joystick outputs and enhance return to center accuracy over multiple axes. Specified for joysticks with normally ranged outputs of 0vdc – 5vdc at full axis travel, a constant output of 2.5vdc is provided for the joystick's position +/-2.5° from center.

APPLICATIONS

Analog Deadband effectively eliminates mechanical return-to-center error, making it ideally suited for safety critical applications susceptible to drift and motion control systems lacking center position trim.

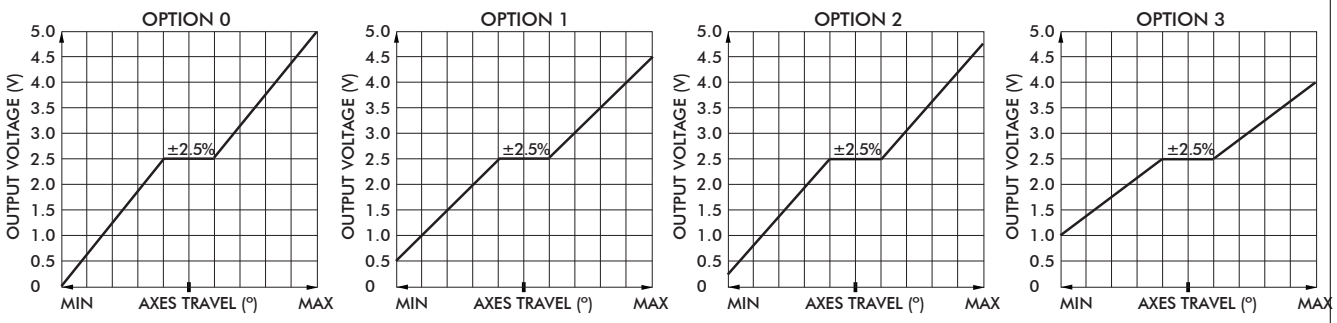

Note: The company reserves the right to change specifications without notice.

HFX series I

First generation Hall effect joysticks

CONFIGURATION OPTIONS - continued

ADDITIONAL OUTPUT OPTIONS

ELECTRICAL SPECIFICATIONS		
Supply Power	-	4.5VDC to 5.5VDC
Supply Current	-	10mA per axis

WIRING SPECIFICATION		
Red wire	-	Customer power supply 4.5-5.5vdc
Black wire	-	Customer power supply ground
Blue wire	-	X axis output
Yellow wire	-	Y axis output
Green wire	-	Z axis output
White wire	-	Pushbutton common wire
Orange,violet,grey,brown,pink,bl/wt/y/bk,gn/bk,gy/w wire	-	Pushbutton outputs

CENTER DETECT

Center Detect utilizes a microprocessor to monitor joystick output and provides both logic and proportional signals for enhanced operator safety. Specified for a joystick normally ranged 0.5VDC to 4.5VDC, the microprocessor continuously monitors the proportional output and provides HI logic signal (5.0VDC) when moved off center and an LO logical signal (0VDC) for an over-range (>4.5VDC) or under-range (<0.5VDC).

APPLICATIONS

Center Detect is ideal for safety critical applications including master relay control "MRC" for a motion control systems or as a brake release for an overhauling load.

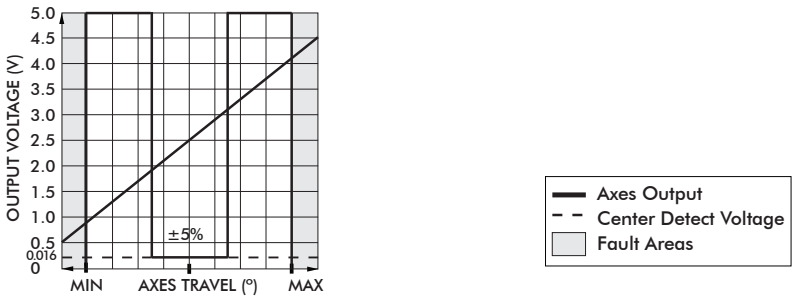

ELECTRICAL SPECIFICATIONS		
Supply Power	-	4.5V to 5.5V
Supply Current	-	30mA + 10mA per axis

WIRING SPECIFICATION		
Red Wire	-	Power supply 4.5 - 5.5VDC
Black Wire	-	Ground
Blue Wire	-	X axis output
Yellow Wire	-	Y axis output
Green Wire	-	Z axis output
Blue/White Wire	-	X axis center detect logic output
Yellow/Black Wire	-	Y axis center detect logic output
Green/Black Wire	-	Z axis center detect logic output
White Wire	-	Pushbutton common wire
Orange,violet,gray,brown,pink,bl/wt,y/bk,gn/bk,gy/w wire	-	Pushbutton outputs

Note: The company reserves the right to change specifications without notice.

HFX series I

First generation Hall effect joysticks

CONFIGURATION OPTIONS - continued

ADDITIONAL OUTPUT OPTIONS

VOLTAGE REGULATOR

The Voltage Regulator is a multi-wired analog option used to mate to a variety of industrial control voltages. The Voltage Regulator may be used when the supply or output voltage is greater than 5V or when bipolar output is required.

User Specified Supply Voltage:

- 5 VDC
- 10 VDC
- 12 VDC
- 24 – 30 VDC
- Custom supply options available.

User Specified Output Voltage:

- 0-5 VDC
- 0-10 VDC
- +/-5 VDC
- +/-10 VDC
- Custom outputs available.

ELECTRICAL SPECIFICATIONS		
Supply Power	-	5VDC to 30VDC
Supply Current	-	90mA max

WIRING SPECIFICATION		
Red wire	-	Supply power 5-30VDC
Black wire	-	Ground
Blue wire	-	X axis output
Yellow wire	-	Y axis output
Green wire	-	Z axis output
White wire	-	Pushbutton common wire
Orange,violet,gray,brown,pink,bl/wt/y/bk,gn/bk,gy/w wire	-	Pushbutton outputs

FRICTION CLUTCH

The Friction Clutch option provides absolute positioning. The joystick does not mechanically return to center, the handle maintains its position when released.

Note: The company reserves the right to change specifications without notice.

PEWATRON
a member of the Angst + Pfister Group

We are here for you. Addresses and Contacts

Sales Switzerland

Postcode 3000 – 9999
Liechtenstein

Matthias Rüegg
Ruhbergstrasse 32
CH-9230 Flawil

Phone + 41 44 877 35 18
Mobile + 41 76 491 66 66
Fax + 41 44 877 35 19

matthias.rueegg@pewatron.com

Postcode 1000 – 2999

Raffael Favaretto
Route d'Oron 124
CH-1673 Promasens

Phone + 41 44 877 35 22
Mobile + 41 76 444 63 14
Fax + 41 44 877 35 23

raffael.favaretto@pewatron.com

Sales Germany

Postcode 60000 – 79999

Dieter Hirthe
Mühlweg 23
D-71554 Weissach i.T.

Phone + 49 719 149 60 58
Mobile + 49 163 762 74 30
Fax + 49 719 193 31 88

dieter.hirthe@pewatron.com

Postcode 10000 – 59999
Postcode 80000 – 99999

Kurt Stritzelberger
Neumarkter Str. 86a
D-81673 Munich

Phone + 49 89 260 38 47
Mobile + 49 171 803 41 35
Fax + 49 89 43 10 91 91

kurt.stritzelberger@pewatron.com

Key Accounts
Aerospace and Defence

Claus Wübbena
Vogelkamp 26
D-26655 Westerstede

Phone + 49 4488 5204 614
Mobile + 49 173 9700 691
Fax + 49 4488 5204 616

claus.wuebbena@pewatron.com

Sales Austria

Kurt Stritzelberger
Neumarkter Str. 86a
D-81673 Munich

Phone + 49 89 260 38 47
Mobile + 49 17 18 03 41 35
Fax + 49 89 43 10 91 91

kurt.stritzelberger@pewatron.com

Sales Other Countries / Product Management

Sensors

Physical Sensors
Data Acquisition

Peter Felder
Phone + 41 44 877 35 05
peter.felder@pewatron.com

Geometrical Sensors

Eric Letsch
Phone + 41 44 877 35 14
eric.letsch@pewatron.com

Power Supplies

DC-DC Converters
Switching Power Supplies
DC-AC Inverters

Sebastiano Leggio
Phone + 41 44 877 35 06
sebastiano.leggio@pewatron.com

E-Components

Current Sensors
Man Machine Interface
Measurement Probes

Sebastiano Leggio
Phone + 41 44 877 35 06
sebastiano.leggio@pewatron.com

PEWATRON AG
Thurgauerstrasse 66
CH-8052 Zurich

Phone + 41 44 877 35 00
Fax + 41 44 877 35 25

www.pewatron.com
info@pewatron.com