APEM

8000 series

Ruggedized switch joysticks

The 8000 Series is a family of rugged switch joysticks. Based on the proven mechanics of the 9000 Series, the 8000 Series utilizes high quality microswitches to provide a range of possible outputs, including the option of progressive switching on a single axis for dual speed control.

KEY FEATURES

- ❑ **One or two axes**
- ❑ **Optional center detect microswitch**
- ❑ **Wide range of handle options**
- ❑ **Up to 1AMP operation**
- ❑ **Gold plated contacts**
- ❑ **Single step or progressive switching**

8000 series

Ruggedized switch joysticks

OPTION SELECTION

SERIES

8	8000

SWITCHING

A	Single Axis, Single Pole
B	Single Axis, Double Pole
C	Single Axis, Progressive with Detents
D	Single Axis, Progressive
E	Two Axes, Single Pole
F	Two Axes, Double Pole

LIMITER

A	Single Axis
C	Cross
D	Diamond
R	Round
S	Square

BEZEL

0	Not Supplied
4	Circular R.M[1]
6	Square D.I[2]
7	Circular D.I

1. Rear Mounting
2. Drop In Mounting

MODIFIER

00	None
20	Guided Feel (See note 2)

AXES

A	One
B	Two

CENTER DETECT

1	Fitted (See note1)
2	Not fitted

HANDLE

C	Round
D	Cylindrical
E	Conical
K	Push Button Tactile
Q	Skirted
X	Two Push Button Tactile
AK	One Pushbutton
AM	Tall One Pushbutton
AT	Conical Low Profile
BB	Three Button

BOOT

5	Standard

NOTES:

1. The additional center detect switch is not available on joysticks with progressive switching.
2. Guided feel is only available on two axes joysticks.

Further non-standard options including custom handles, special limiters and detents are available. Please refer to the factory.

3. Only a square limiter will allow sufficient travel in a diagonal direction to activate both speed and steer switches.

BEZEL OPTIONS

For drop in mounting, please specify bezel option 6 or 7. For sub-panel mounting, no bezel is necessary, unless the boot is required to seal to the front face of the panel in which case option 4 should be specified.
Bezels 6 & 7 clamp the boot and top face of the joystick body to the panel when bezel 4 clamp only the boot.

SPRINGING

As standard 8000 Series are offered sprung to center. The standard spring force requires1.3N (nominally) to off-center the joystick. The 8000 Series may be specified with a lighter spring (1N), or a stronger spring (1.6N)
Note: Forces quoted are subject to exact joystick configuration and are provided as a guide only.

SPECIFICATIONS

Mechanical Life Cycles	:	> 1 Million Mechanical Operations	Maximum Voltage	:	125 VAC
Current Rating	:	To 1A	Switch Contacts	:	Gold Plated
Weight	:	90 grams (0.20lbs)	Above Panel Seal	:	IP65
Operating Deflection	:	+/-18°	Body Material	:	Glass Reinforced ABS
Shaft Diameter	:	5 mm (0.20in)	Gimbal Pivot	:	Acetal & Hardened Steel
Shaft Material	:	Stainless Steel	Other Materials	:	Brass, Acetal, Nylon
Boot	:	Neoprene	Temperature Range	:	-25°C to 80°C (-13°F to 76°F)

1. Life and reliability of the switches is heavily determined by the type of application and parameters such as load. The Technical Support team will provide further advice about the expected switch performance under differing loads or DC supplies.

Note: The company reserves the right to change specifications without notice.

8000 series

Ruggedized switch joysticks

DIMENSIONAL DRAWINGS - HANDLES

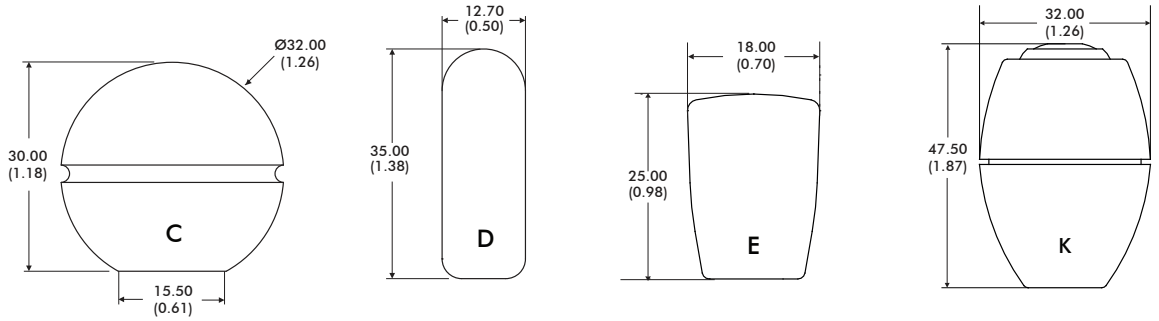

MATERIAL	Phenolic	Aluminum	Nylon	ABS
FINISH	Gloss	Anodised	Sparked Matt	Sparked Matt
STANDARD COLOR	Black	Black	Black	Black
OTHER COLORS	Not Available	Not Available	Upon Request	Not Available
NOTES:				Uses APEM IS Switch

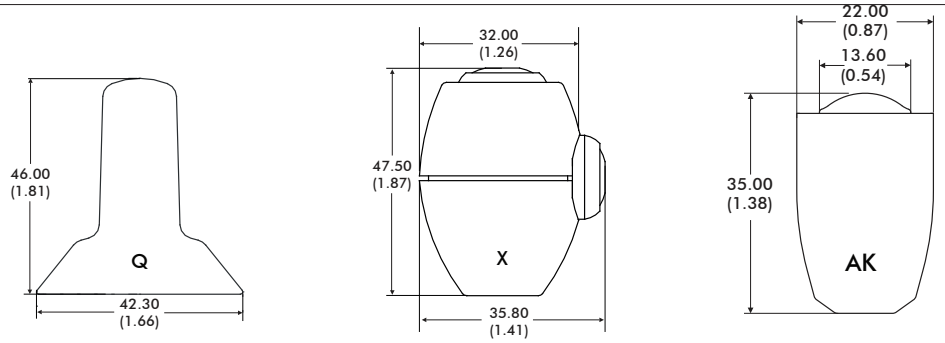

MATERIAL	Nylon	ABS	Aluminum
FINISH	Sparked Matt	Sparked Matt	Anodised
STANDARD COLOR	Black	Black	Black
OTHER COLORS	Not Available	Not Available	Not Available
NOTES:		Uses APEM IS Switch	Uses APEM IA Switch

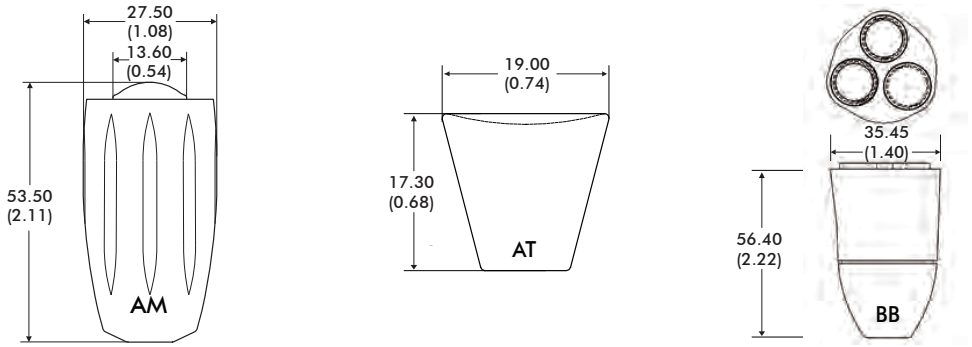

MATERIAL	Aluminum	Nylon	Nylon
FINISH	Anodised	Sparked Matt	Sparked Matt
STANDARD COLOR	Black	Black	Black
OTHER COLORS	Not Available	Upon Request	Not Available
NOTES:	Uses APEM IA Switch		Uses APEM IL Switch

1. Dimensions are in mm/(inch)

Note: The company reserves the right to change specifications without notice.

8000 series

Ruggedized switch joysticks

DIMENSIONAL DRAWINGS

GENERAL DIMENSIONS

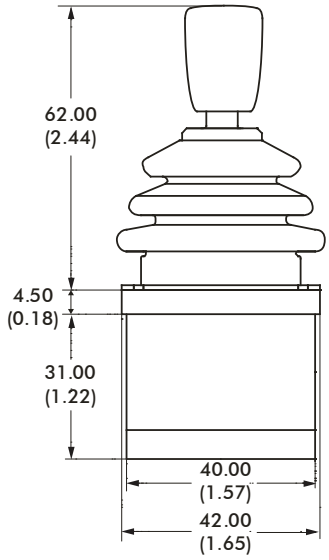

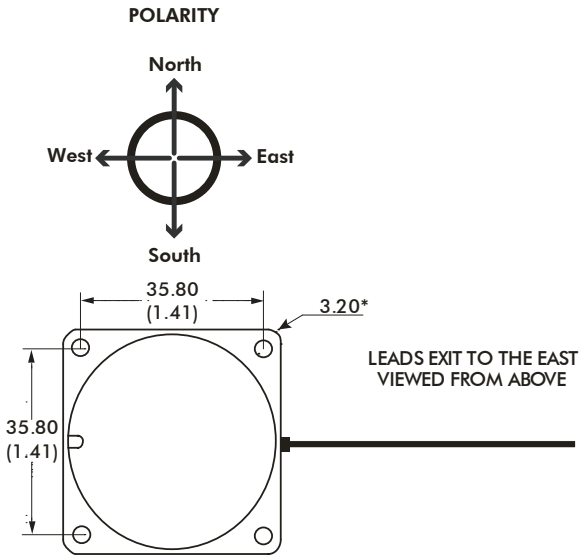

DROP IN MOUNTING - PANEL CUT-OUT & MOUNTING INSTALLATION

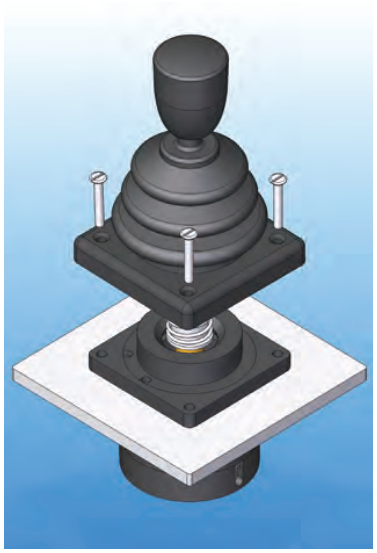

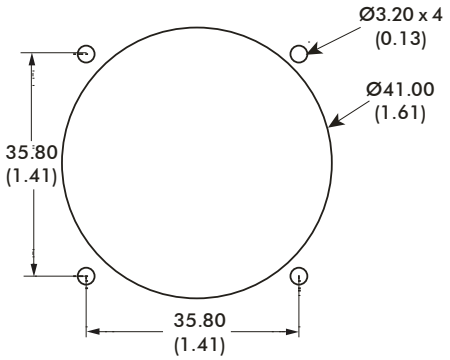

The joystick is dropped into the panel cut-out. The joystick and boot must be kept in place by bezel (option 6 & 7). For panel thickness of <3mm, M3 x 16 countersunk machine screws are recommended.

NOTES:

1. Dimensions are in mm/(inch)
2. The dimensions shown are for a generic 8000 Series with the conical E type handle. For specific dimensions of this or any other configuration please refer to the Factory.

Note: The company reserves the right to change specifications without notice.

8000 series

Ruggedized switch joysticks

MOUNTING INSTALLATION

MOUNTING OPTION A - PANEL CUT-OUT & MOUNTING INSTALLATION

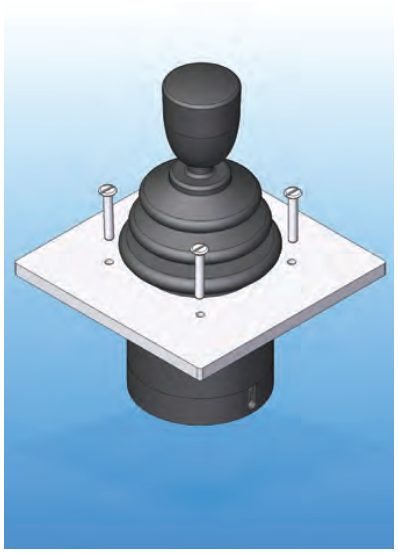

MOUNTING CUT-OUT

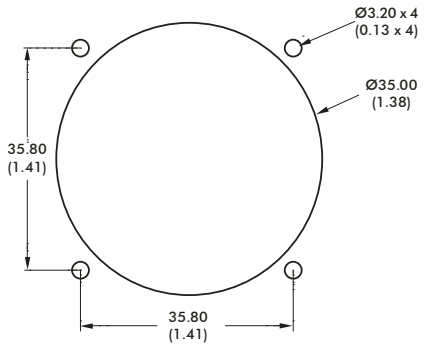

When mounted this way the panel acts as the bezel and no separate bezel is needed. M3 machine screws are recommended.

MOUNTING OPTION B - PANEL CUT-OUT & MOUNTING INSTALLATION

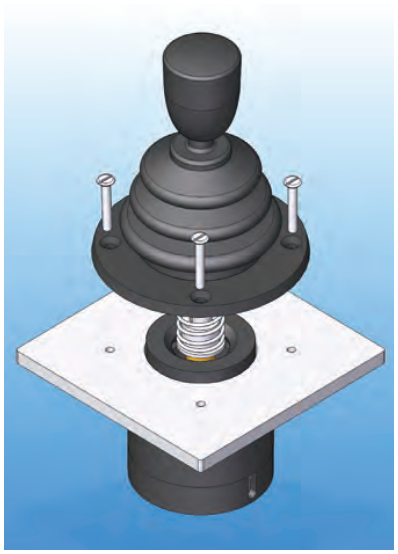

MOUNTING CUT-OUT

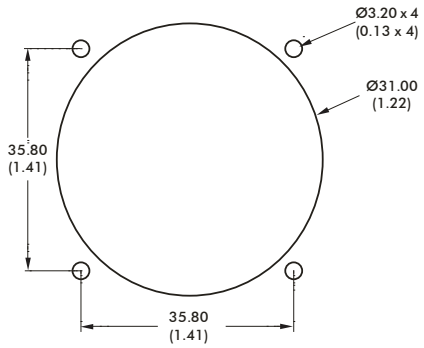

The joystick flange is mounted beneath the panel and the base of the boot must be brought through the panel cut-out and held in place with the circular bezel (option 4). For panel thicknesses of 3mm, M3 x 16 countersunk machine screws are recommended.

Note: When sub panel mounting, great care should be taken not to damage the boot, or any of the mechanism under the boot. All panel cut-outs should be free from sharp edges and swarf that may damage the boot.

Note: The company reserves the right to change specifications without notice.

8000 series

Ruggedized switch joysticks

SWITCHING OPTIONS

SINGLE AXIS CONFIGURATIONS

SWITCHING OPTION A

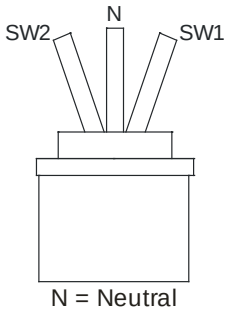

One switch will actuate as the joystick moves away from center in either direction.

SWITCHING OPTION B

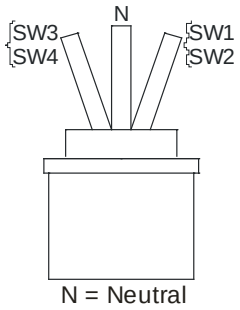

Two switches will actuate as the joystick moves away from center, in either direction.

SWITCHING OPTION C

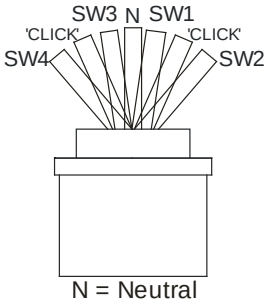

As per option D, but with a mechanical detent between actuation of the first and second switch.

SWITCHING OPTION D

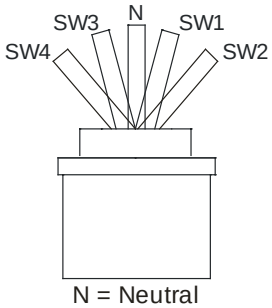

One switch will actuate after 50% of travel, with a further switch at the end of travel, in either direction.

TWO AXES CONFIGURATIONS

SWITCHING OPTION E

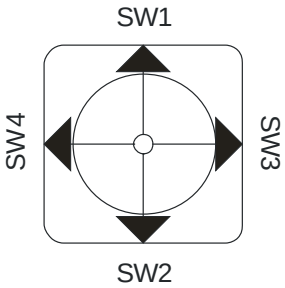

One switch will actuate in each of the four directions: North, South, East & West.

SWITCHING OPTION F

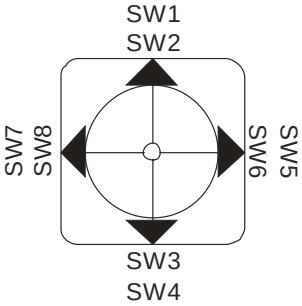

Two switches will actuate in each of the four directions: North, South, East & West.

Note: The company reserves the right to change specifications without notice.

8000 series

Ruggedized switch joysticks

CONFIGURATION OPTIONS

MICROSWITCHES

The 8000 Series utilizes industrial quality microswitches with changeover contacts. As standard, the switches are rated to a maximum of 1 Amp, and have gold plated contacts for reliable switching at low current levels. Please note when specifying a joystick with a pushbutton handle the characteristics of the pushbutton will be different from the microswitches. Please refer to Apem for full details and characteristics of your chosen configuration.

SWITCHING OPTIONS

The following configurations are available as standard :

Single Axis - Single Pole : One switch in each of the the two directions; North & South.
Single Axis - Double Pole : Two switches in each of the the two directions; North & South.
Single Axis - Progressive : One switch will actuate after 8 degrees of movement, with a further switch actuating after another 10 degrees of movement, in either direction.
Single Axis - Progressive with detents : As above, but with a mechanical detent at the point of the first switch actuation in each direction.
Dual Axes - Single Pole : One switch in each of the four positions; North, South, East and West.
Dual Axes - Double Pole : Two switches in each of the four positions; North, South, East and West.

Note : Double Pole switching is designed such that both switches in any given position trigger nominally together.

Many configurations are also available with a further microswitch actuating when the joystick is at center, for center detection purposes.

GUIDED FEEL

8000 Series joysticks may also be specified with guided feel. A joystick with guided feel moves more readily towards the poles (North, South, East and West) and whilst it can still move away from the poles, the force required to do so is greater. Unless specified otherwise, joysticks are supplied as standard without guiding. This standard configuration allows the user to move the joystick anywhere within the limiter with the same force and without any bias.

CABLE SPECIFICATION

As standard the joysticks are supplied utilizing the normally open contacts of the microswitches.
For connection to the normally closed contacts, please specify this as part of your special modification.
Cable information may be subject to specification, please refer to Apem for details.Connectors and custom looms may be factory fitted upon request.

14/0.12 - Fourteen strands of 0.12mm diameter tinned annealed copper wire PVC insulated to a nominal OD of 1mm			
Red	: Common	Black	: First Switch East
Blue	: Second Switch West	Yellow	: Second Switch East
Green	: First Switch West	Purple	: First Switch South
Orange	: Second Switch North	White	: Second Switch South
Brown	: First Switch North	Grey	: Center Detect Switch
7/0.127 - Seven strands of 0.127mm diameter tinned copper wire ETFE insulated, to a nominal OD of 0.7mm			
Orange	: First Pushbutton (Top of Handle)	Green	: Second Pushbutton
All 8000 Series are supplied with 150mm of twisted cable harness, with tinned ends.			

Note: The company reserves the right to change specifications without notice.

PEWATRON
a member of the Angst + Pfister Group

We are here for you. Addresses and Contacts

Sales Switzerland

Postcode 3000 – 9999
Liechtenstein

Matthias Rüegg
Ruhbergstrasse 32
CH-9230 Flawil

Phone + 41 44 877 35 18
Mobile + 41 76 491 66 66
Fax + 41 44 877 35 19

matthias.rueegg@pewatron.com

Postcode 1000 – 2999

Raffael Favaretto
Route d'Oron 124
CH-1673 Promasens

Phone + 41 44 877 35 22
Mobile + 41 76 444 63 14
Fax + 41 44 877 35 23

raffael.favaretto@pewatron.com

Sales Germany

Postcode 60000 – 79999

Dieter Hirthe
Mühlweg 23
D-71554 Weissach i.T.

Phone + 49 719 149 60 58
Mobile + 49 163 762 74 30
Fax + 49 719 193 31 88

dieter.hirthe@pewatron.com

Postcode 10000 – 59999
Postcode 80000 – 99999

Kurt Stritzelberger
Neumarkter Str. 86a
D-81673 Munich

Phone + 49 89 260 38 47
Mobile + 49 171 803 41 35
Fax + 49 89 43 10 91 91

kurt.stritzelberger@pewatron.com

Key Accounts
Aerospace and Defence

Claus Wübbena
Vogelkamp 26
D-26655 Westerstede

Phone + 49 4488 5204 614
Mobile + 49 173 9700 691
Fax + 49 4488 5204 616

claus.wuebbena@pewatron.com

Sales Austria

Kurt Stritzelberger
Neumarkter Str. 86a
D-81673 Munich

Phone + 49 89 260 38 47
Mobile + 49 17 18 03 41 35
Fax + 49 89 43 10 91 91

kurt.stritzelberger@pewatron.com

Sales Other Countries / Product Management

Sensors

Physical Sensors
Data Acquisition

Peter Felder
Phone + 41 44 877 35 05
peter.felder@pewatron.com

Geometrical Sensors

Eric Letsch
Phone + 41 44 877 35 14
eric.letsch@pewatron.com

Power Supplies

DC-DC Converters
Switching Power Supplies
DC-AC Inverters

Sebastiano Leggio
Phone + 41 44 877 35 06
sebastiano.leggio@pewatron.com

E-Components

Current Sensors
Man Machine Interface
Measurement Probes

Sebastiano Leggio
Phone + 41 44 877 35 06
sebastiano.leggio@pewatron.com

PEWATRON AG
Thurgauerstrasse 66
CH-8052 Zurich

Phone + 41 44 877 35 00
Fax + 41 44 877 35 25

www.pewatron.com
info@pewatron.com