CH Products

LP and P-Series

Trackballs

LP and P-Series

Panel Mount Trackballs

CH Products' LP and P-Series trackballs are designed for panel mount applications requiring a precision ergonomic cursor control device. Constructed with premiere components including high-end optical encoders and stainless steel shafts and bearings, LP and P-Series trackballs are ideally suited for kiosks, shipboard controls, and medical imaging systems. Available in three sizes; optional features include backlit illumination and choice of protocol.

Available Models

LP100
LP150
P200

Mechanical Specifications

	LP100	LP150	P200
Ball Diameter:	1.00”	1.50”	2.00”
Tracking Force	15g	10g	10g
Weight	33.5g	118.5g	257.5g
Life Cycle (ball rotations)	5,000,000	5,000,000	5,000,000
Operating Temperature	-40ºC to +85ºC	-40ºC to +85ºC	-40ºC to +85ºC

Protocol Options and Electrical Specifications

USB	
Input:	4.00V - 5.25V @25mA max*
Output:	USB 1.1
PS/2 (2/3BTN PS/2)	
Input:	5.00V @ 25mA max*
Output:	CMOS/TTL
Microsoft Serial**	
Input:	DTR/RTS @ 14mA max*
Output:	RS-232, Serial
Quadrature	
Input:	5.00V @ 30mA max*
Output:	Quadrature Waveforms
Sun Workstation**	
Input:	5.00V @ 30mA max*
Output:	CMOS/TTL

* +30mA for backlit illumination
** Not available for LP100

Note: Microsoft Serial interface requires a customer supplied 5 volt supply for LED Backlighting option.

Configuration Options

LED Backlit Illumination Options
Choice of Red, Blue, Green, or Neutral
Mounting Options
180º horizontal or 90º vertical (specify when ordering)
LP100 mounting besel (see technical drawing)
Additional Options
Connector cables
Conformal-coated PCB
Pushbutton switch strips: Two, three, or four (USB only) button

All specifications are subject to change without notice.

LPIOO

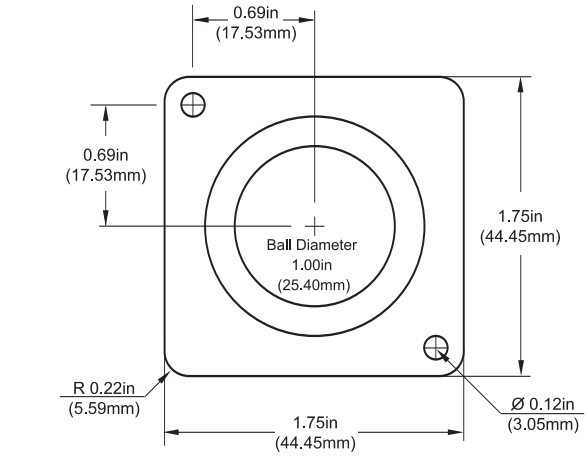

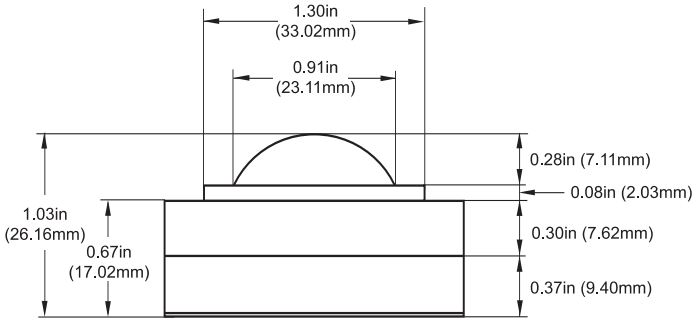

MOUNTING CUTOUT DIMENSIONS

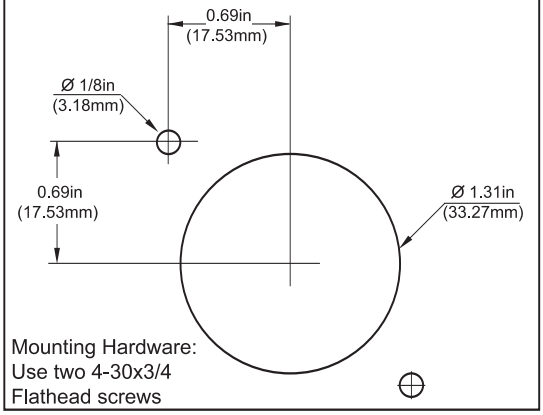

Mounting Hardware:
Use two 4-30x3/4
Flathead screws

ADDITIONAL MOUNTING BEZELS

(Please specify panel thickness when ordering)

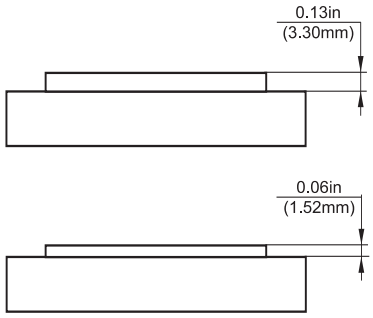

LP150

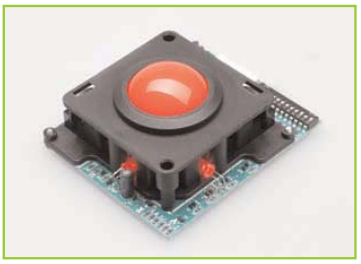

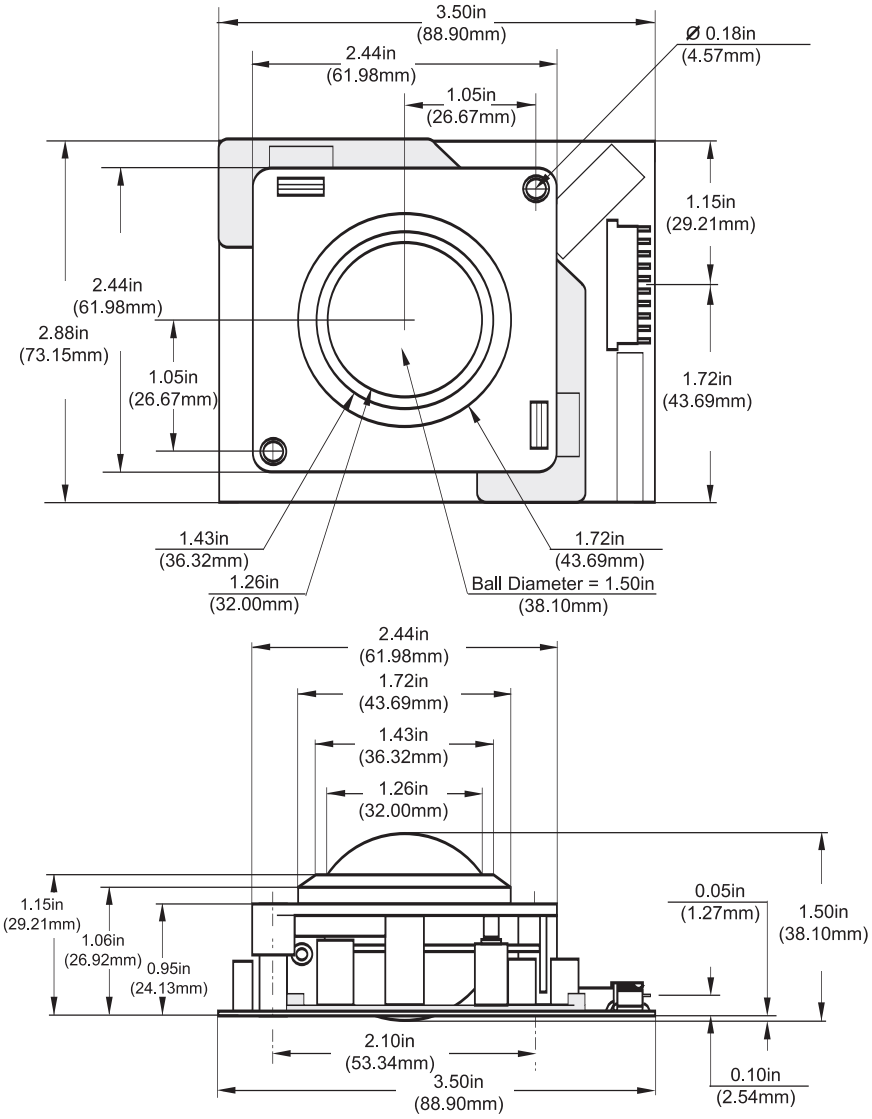
3.50in
(88.90mm)
2.44in
(61.98mm)
1.05in
(26.67mm)
Ø 0.18in
(4.57mm)
1.15in
(29.21mm)
2.44in
(61.98mm)
2.88in
(73.15mm)
1.05in
(26.67mm)
1.72in
(43.69mm)
1.43in
(36.32mm)
1.26in
(32.00mm)
1.72in
(43.69mm)
Ball Diameter = 1.50in
(38.10mm)
2.44in
(61.98mm)
1.72in
(43.69mm)
1.43in
(36.32mm)
1.26in
(32.00mm)
1.15in
(29.21mm)
1.06in
(26.92mm)
0.95in
(24.13mm)
0.05in
(1.27mm)
1.50in
(38.10mm)
2.10in
(53.34mm)
3.50in
(88.90mm)
0.10in
(2.54mm)

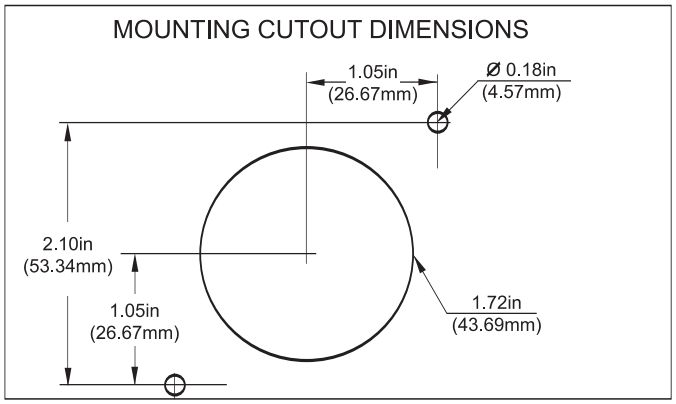
MOUNTING CUTOUT DIMENSIONS
1.05in
(26.67mm)
Ø 0.18in
(4.57mm)
2.10in
(53.34mm)
1.05in
(26.67mm)
1.72in
(43.69mm)

P200

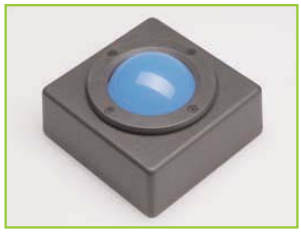

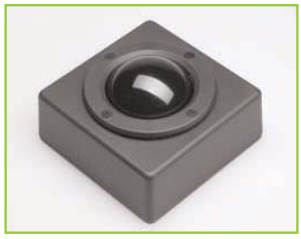

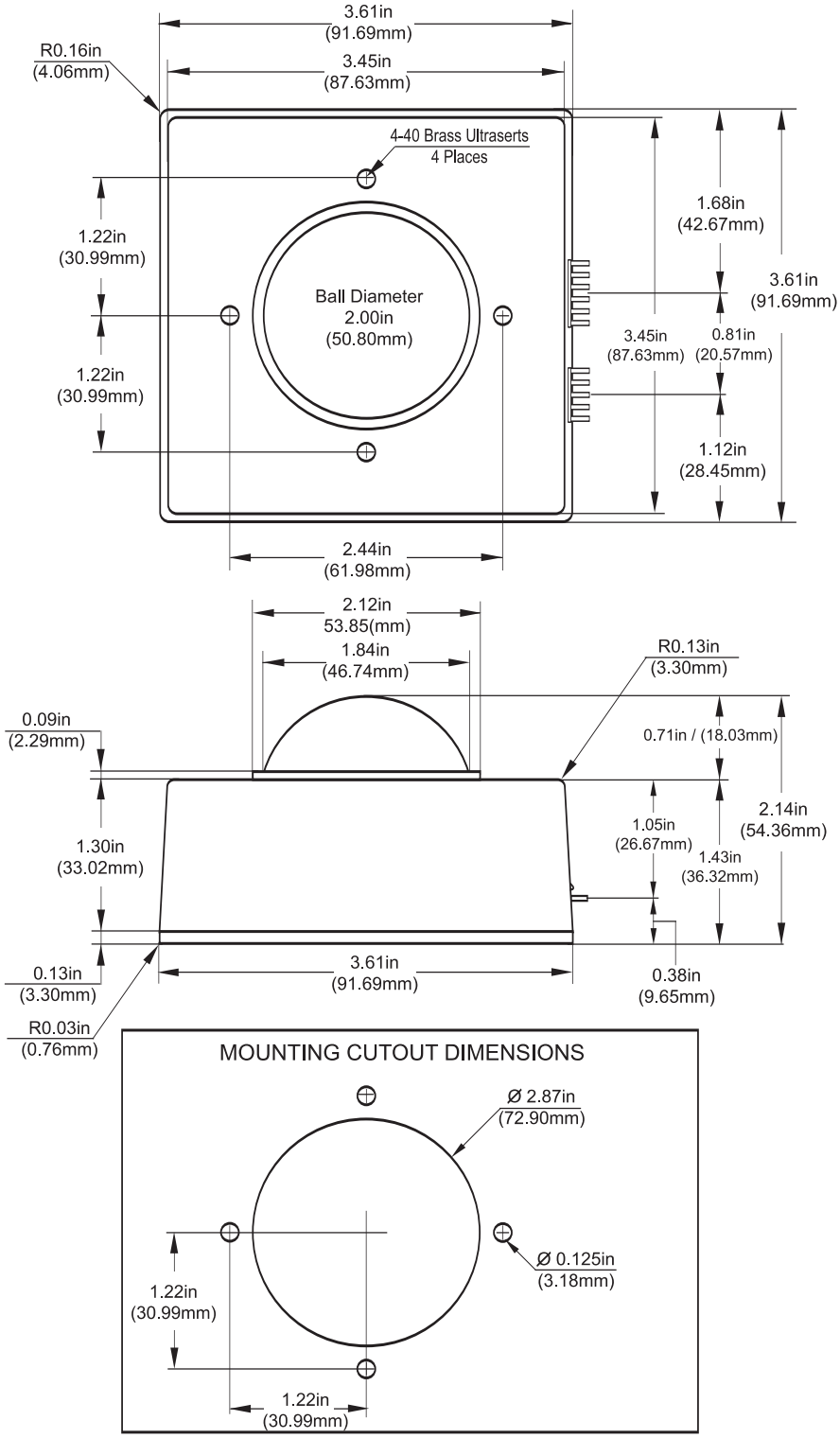
3.61in
(91.69mm)
3.45in
(87.63mm)
R0.16in
(4.06mm)
4-40 Brass Ultraserts
4 Places
1.22in
(30.99mm)
Ball Diameter
2.00in
(50.80mm)
1.22in
(30.99mm)
1.68in
(42.67mm)
3.61in
(91.69mm)
3.45in
(87.63mm)
0.81in
(20.57mm)
1.12in
(28.45mm)
2.44in
(61.98mm)
2.12in
53.85(mm)
1.84in
(46.74mm)
R0.13in
(3.30mm)
0.09in
(2.29mm)
0.71in / (18.03mm)
2.14in
(54.36mm)
1.05in
(26.67mm)
1.43in
(36.32mm)
1.30in
(33.02mm)
0.13in
(3.30mm)
3.61in
(91.69mm)
0.38in
(9.65mm)
R0.03in
(0.76mm)
MOUNTING CUTOUT DIMENSIONS
Ø 2.87in
(72.90mm)
Ø 0.125in
(3.18mm)
1.22in
(30.99mm)
1.22in
(30.99mm)

CH Products

Button Strips Options

Features

Two, three or four (USB only) button
Tactile feedback
Normally open momentary contact switch
5,000,000 life cycle rating at 500mA at 12VDC
Black or gray button caps
Choice of convex or concave design

2-button strip

3-button strip

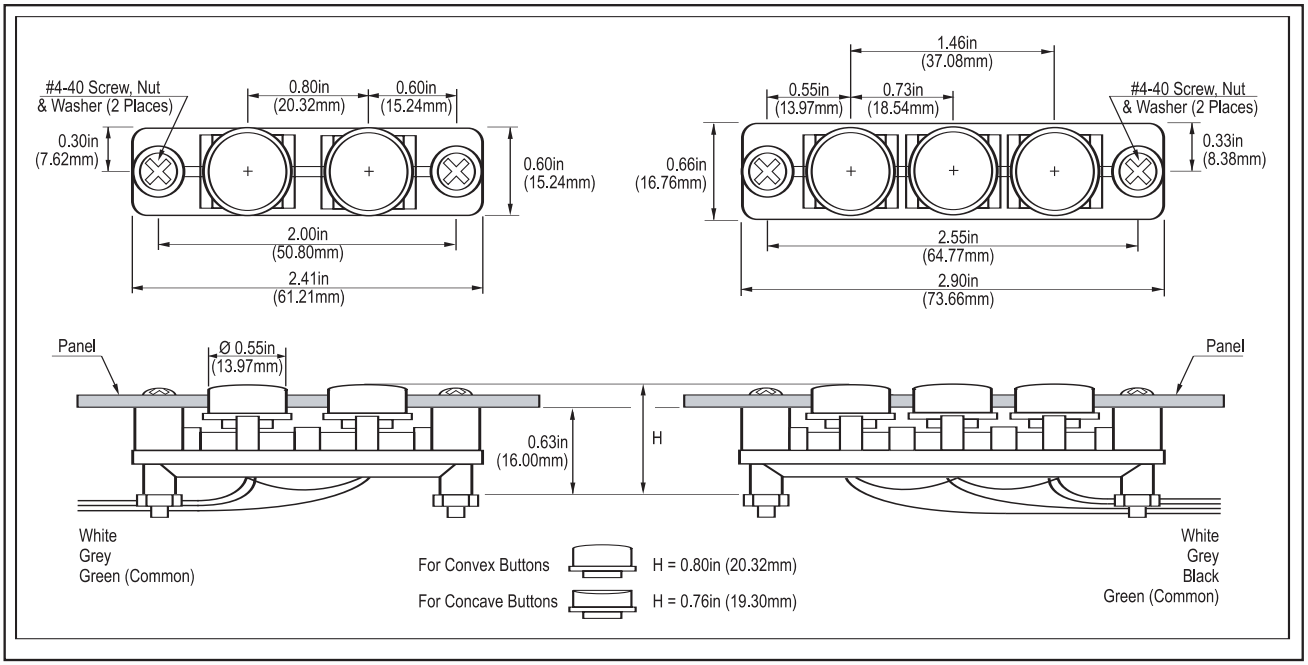

PEWATRON
a member of the Angst + Pfister Group

We are here for you. Addresses and Contacts

Sales Switzerland

Postcode 3000 – 9999
Liechtenstein

Matthias Rüegg
Ruhbergstrasse 32
CH-9230 Flawil

Phone + 41 44 877 35 18
Mobile + 41 76 491 66 66
Fax + 41 44 877 35 19

matthias.rueegg@pewatron.com

Postcode 1000 – 2999

Raffael Favaretto
Route d'Oron 124
CH-1673 Promasens

Phone + 41 44 877 35 22
Mobile + 41 76 444 63 14
Fax + 41 44 877 35 23

raffael.favaretto@pewatron.com

Sales Germany

Postcode 60000 – 79999

Dieter Hirthe
Mühlweg 23
D-71554 Weissach i.T.

Phone + 49 719 149 60 58
Mobile + 49 163 762 74 30
Fax + 49 719 193 31 88

dieter.hirthe@pewatron.com

Postcode 10000 – 59999
Postcode 80000 – 99999

Kurt Stritzelberger
Neumarkter Str. 86a
D-81673 Munich

Phone + 49 89 260 38 47
Mobile + 49 171 803 41 35
Fax + 49 89 43 10 91 91

kurt.stritzelberger@pewatron.com

Key Accounts
Aerospace and Defence

Claus Wübbena
Vogelkamp 26
D-26655 Westerstede

Phone + 49 4488 5204 614
Mobile + 49 173 9700 691
Fax + 49 4488 5204 616

claus.wuebbena@pewatron.com

Sales Austria

Kurt Stritzelberger
Neumarkter Str. 86a
D-81673 Munich

Phone + 49 89 260 38 47
Mobile + 49 17 18 03 41 35
Fax + 49 89 43 10 91 91

kurt.stritzelberger@pewatron.com

Sales Other Countries / Product Management

Sensors

Physical Sensors
Data Acquisition

Peter Felder
Phone + 41 44 877 35 05
peter.felder@pewatron.com

Geometrical Sensors

Eric Letsch
Phone + 41 44 877 35 14
eric.letsch@pewatron.com

Power Supplies

DC-DC Converters
Switching Power Supplies
DC-AC Inverters

Sebastiano Leggio
Phone + 41 44 877 35 06
sebastiano.leggio@pewatron.com

E-Components

Current Sensors
Man Machine Interface
Measurement Probes

Sebastiano Leggio
Phone + 41 44 877 35 06
sebastiano.leggio@pewatron.com

PEWATRON AG
Thurgauerstrasse 66
CH-8052 Zurich

Phone + 41 44 877 35 00
Fax + 41 44 877 35 25

www.pewatron.com
info@pewatron.com