CH Products

R-Series

Removable Trackballs

R-Series
Removable Trackballs

R-Series Trackballs, CH Products' next generation of cursor control device feature a removable bezel to allow for regular maintenance and cleaning. Available in two sizes, optional features include backlit illumination, pushbutton switch strips, as well as vertical or horizontal mounting. R-Series trackballs are ideal for applications susceptible to light dust and moisture.

Key Features

- Non-contacting optical encoders
- Polished stainless steel shafts
- High precision cartridge stainless steel bearings

Available Models

R150
R200

Physical Specifications	R150	R200
Ball Diameter:	1.50"	2.00"
Tracking Force:	10g	10g
Weight:	97g	235.5g
Life Cycle (ball rotations):	5,000,000	5,000,000
Operating Temperature:	-40ºC to +85ºC	-40ºC to +85ºC

Protocol Options and Electrical Specifications

USB	
Input:	4.75V – 5.25V @25mA max*
Output:	USB 1.1
PS/2 (2/3BTN PS/2)	
Input:	5.00V @ 25mA max*
Output:	CMOS/TTL

*+30mA for backlit illumination

Configuration Options

Backlit illumination:	Red, Blue, Green, or Neutral
Pushbutton switch strips:	Two, three, or four (USB only) button
Connector cables	
Conformal-coated PCB	

Mounting Options

180º horizontal or 90º vertical (please specify when ordering)

R150 and R200 balls should be cleaned with a mild soap solution.
All specifications are subject to change without notice.

RI50

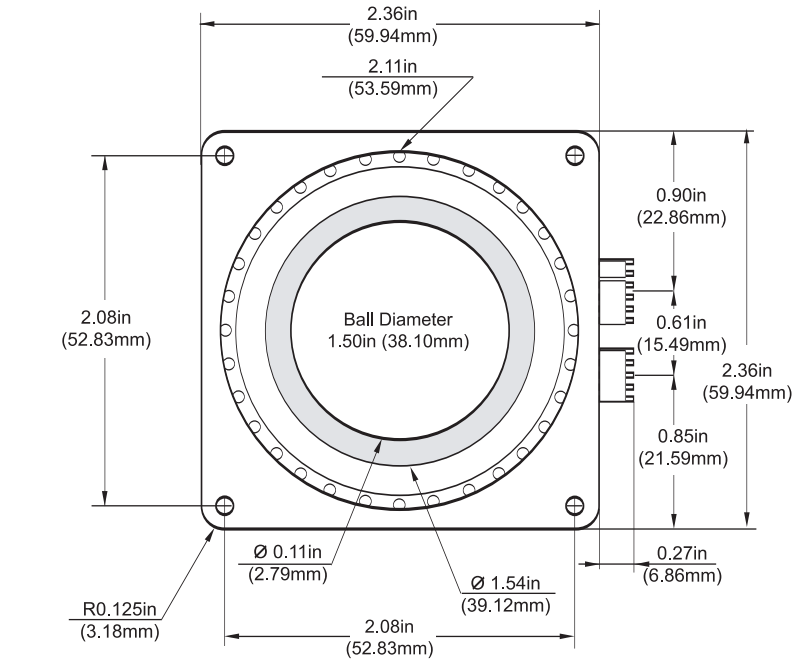
2.36in
(59.94mm)
2.11in
(53.59mm)
0.90in
(22.86mm)
2.08in
(52.83mm)
Ball Diameter
1.50in (38.10mm)
0.61in
(15.49mm)
2.36in
(59.94mm)
0.85in
(21.59mm)
Ø 0.11in
(2.79mm)
Ø 1.54in
(39.12mm)
0.27in
(6.86mm)
R0.125in
(3.18mm)
2.08in
(52.83mm)

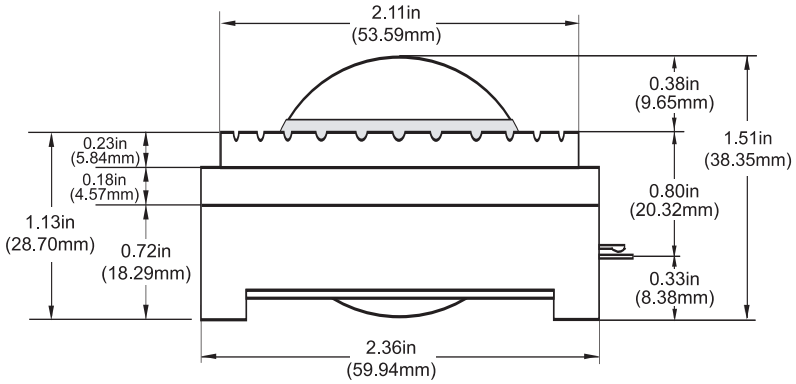
2.11in
(53.59mm)
0.38in
(9.65mm)
0.23in
(5.84mm)
0.18in
(4.57mm)
1.51in
(38.35mm)
0.80in
(20.32mm)
1.13in
(28.70mm)
0.72in
(18.29mm)
0.33in
(8.38mm)
2.36in
(59.94mm)

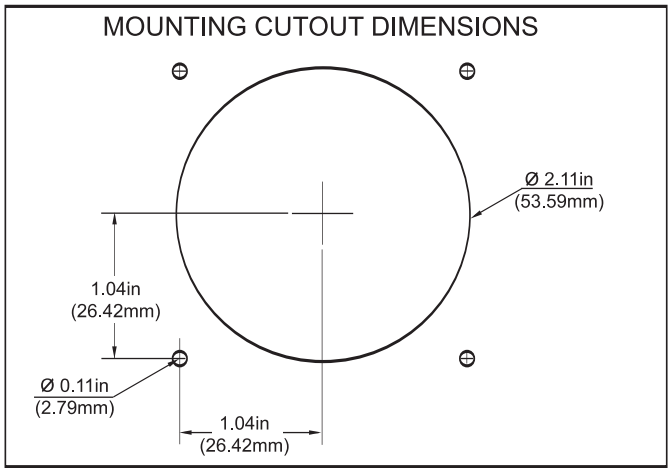
MOUNTING CUTOUT DIMENSIONS
Ø 2.11in
(53.59mm)
1.04in
(26.42mm)
Ø 0.11in
(2.79mm)
1.04in
(26.42mm)

R200

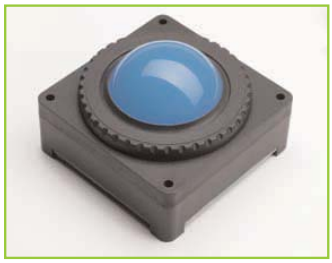

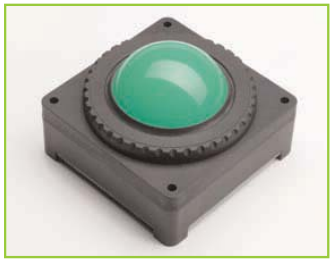

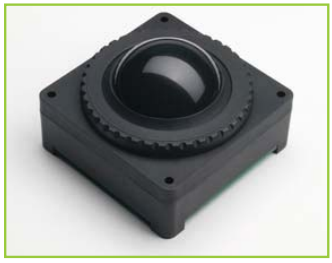

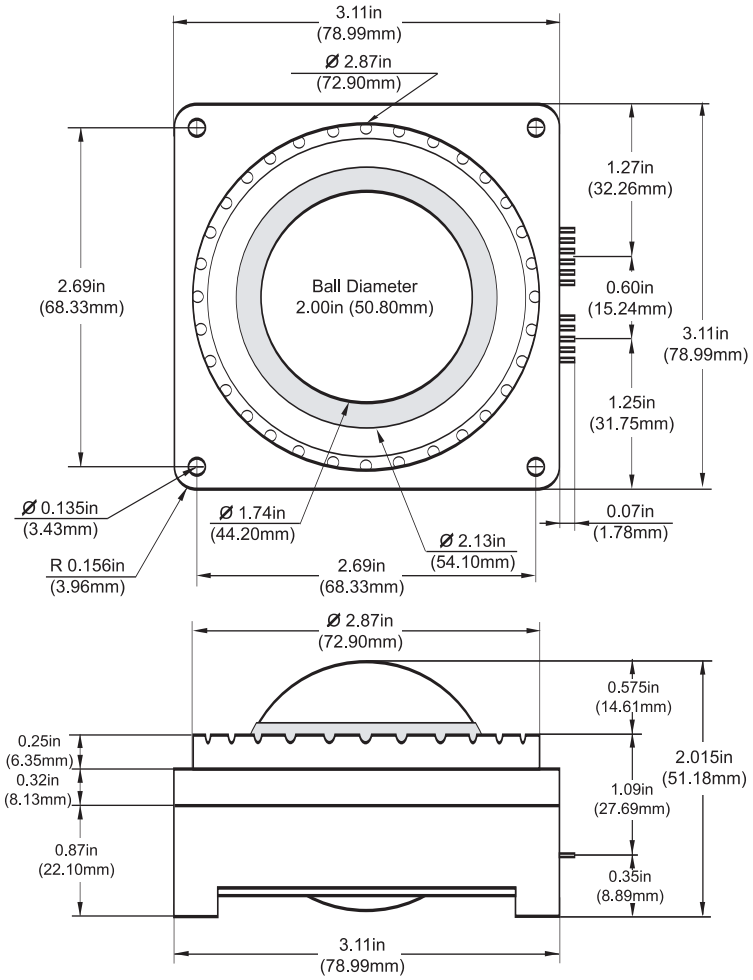
3.11in
(78.99mm)
Ø 2.87in
(72.90mm)
1.27in
(32.26mm)
2.69in
(68.33mm)
Ball Diameter
2.00in (50.80mm)
0.60in
(15.24mm)
3.11in
(78.99mm)
1.25in
(31.75mm)
Ø 0.135in
(3.43mm)
Ø 1.74in
(44.20mm)
0.07in
(1.78mm)
Ø 2.13in
(54.10mm)
R 0.156in
(3.96mm)
2.69in
(68.33mm)
Ø 2.87in
(72.90mm)
0.575in
(14.61mm)
0.25in
(6.35mm)
0.32in
(8.13mm)
2.015in
(51.18mm)
1.09in
(27.69mm)
0.87in
(22.10mm)
0.35in
(8.89mm)
3.11in
(78.99mm)

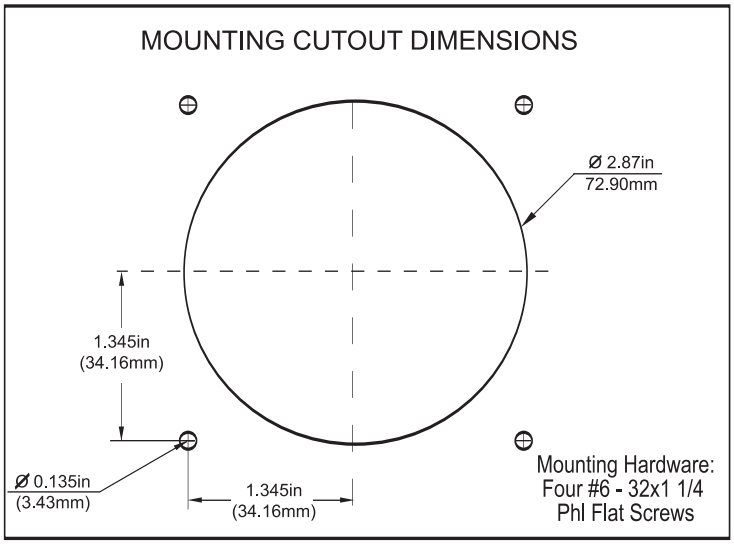
MOUNTING CUTOUT DIMENSIONS
Ø 2.87in
72.90mm
1.345in
(34.16mm)
Ø 0.135in
(3.43mm)
1.345in
(34.16mm)
Mounting Hardware:
Four #6 - 32x1 1/4
Phl Flat Screws

CH Products

Button Strip Options

Features

Two, three or four (USB only) button
Tactile feedback
Normally open momentary contact switch
5,000,000 life cycle rating at 500mA at 12VDC
Black or gray button caps
Choice of convex or concave design

2-button strip

3-button strip

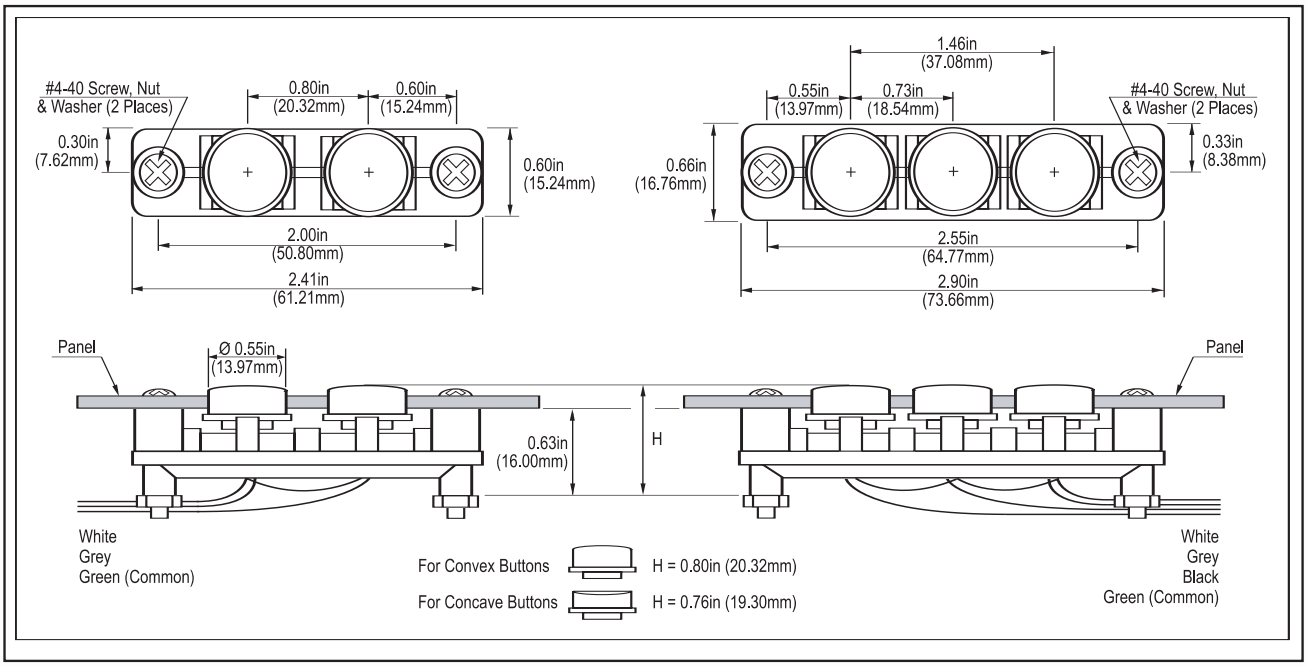

PEWATRON
a member of the Angst + Pfister Group

We are here for you. Addresses and Contacts

Sales Switzerland

Postcode 3000 – 9999
Liechtenstein

Matthias Rüegg
Ruhbergstrasse 32
CH-9230 Flawil

Phone + 41 44 877 35 18
Mobile + 41 76 491 66 66
Fax + 41 44 877 35 19

matthias.rueegg@pewatron.com

Postcode 1000 – 2999

Raffael Favaretto
Route d'Oron 124
CH-1673 Promasens

Phone + 41 44 877 35 22
Mobile + 41 76 444 63 14
Fax + 41 44 877 35 23

raffael.favaretto@pewatron.com

Sales Germany

Postcode 60000 – 79999

Dieter Hirthe
Mühlweg 23
D-71554 Weissach i.T.

Phone + 49 719 149 60 58
Mobile + 49 163 762 74 30
Fax + 49 719 193 31 88

dieter.hirthe@pewatron.com

Postcode 10000 – 59999
Postcode 80000 – 99999

Kurt Stritzelberger
Neumarkter Str. 86a
D-81673 Munich

Phone + 49 89 260 38 47
Mobile + 49 171 803 41 35
Fax + 49 89 43 10 91 91

kurt.stritzelberger@pewatron.com

Key Accounts
Aerospace and Defence

Claus Wübbena
Vogelkamp 26
D-26655 Westerstede

Phone + 49 4488 5204 614
Mobile + 49 173 9700 691
Fax + 49 4488 5204 616

claus.wuebbena@pewatron.com

Sales Austria

Kurt Stritzelberger
Neumarkter Str. 86a
D-81673 Munich

Phone + 49 89 260 38 47
Mobile + 49 17 18 03 41 35
Fax + 49 89 43 10 91 91

kurt.stritzelberger@pewatron.com

Sales Other Countries / Product Management

Sensors

Physical Sensors
Data Acquisition

Peter Felder
Phone + 41 44 877 35 05
peter.felder@pewatron.com

Geometrical Sensors

Eric Letsch
Phone + 41 44 877 35 14
eric.letsch@pewatron.com

Power Supplies

DC-DC Converters
Switching Power Supplies
DC-AC Inverters

Sebastiano Leggio
Phone + 41 44 877 35 06
sebastiano.leggio@pewatron.com

E-Components

Current Sensors
Man Machine Interface
Measurement Probes

Sebastiano Leggio
Phone + 41 44 877 35 06
sebastiano.leggio@pewatron.com

PEWATRON AG
Thurgauerstrasse 66
CH-8052 Zurich

Phone + 41 44 877 35 00
Fax + 41 44 877 35 25

www.pewatron.com
info@pewatron.com