DP-200PW6
200MHz DIFFERENTIAL PROBE
USER'S MANUAL

This probe is in compliance with IEC-61010-031 CAT I, Pollution Degree 2.

1. Safety Terms and Symbols

Terms appear in this manual:

WARNING. Warning statements identify conditions or practice that could result in injury or loss life.

CAUTION. Caution statements identify conditions or practice that could result in damage to this product or other property.

Symbols appear on the product:

Danger High Voltage	Protective (Earth) Terminal	Attention Refer to Manual

2. General Safety Summary

Review the following safety precautions to avoid injury and prevent damage to this probe or any products that connected to it.

Observe maximum working voltage

To avoid any injury, do not use the probe under the condition that the voltage between either input lead or earth is above 60Vrms CAT I.

Supporting your great ideas www.pewatron.com PEWATRON a member of the Angst + Pfister Group

Must be grounded

This probe is grounded with the shell of BNC connector and an auxiliary grounding terminal, through the grounding conductor of the power cord of the measurement instrument.

Before making connections to the input leads of this probe, ensure that the output BNC connector is attached to the BNC connector of the measurement instrument and the auxiliary grounding terminal is connected to a proper ground, while the measurement instrument is properly grounded.

Do not operate without covers

To avoid electric shock or fire hazard, do not operate this probe with covers removed.

Do not operate in wet/damp conditions

To avoid electric shock, do not operate this probe in wet of damp conditions.

Do not operate in explosive atmosphere

To avoid injury or fire hazard, do not operate this probe in an explosive atmosphere.

Avoid exposed circuit

To avoid injury, remove jewelry such as rings, watches, and other metallic objects. Do not touch exposed connections and components when power is present.

Use proper power source

To ensure this probe function well, use four AA cells or 6VDC/90mA or regulated 9VDC/70mA mains adaptor or power lead.

Do not operate with suspected failures

If you suspect there is damage to this probe, have it inspected by qualified service personnel.

3. Description

By enabling conventional oscilloscopes to display and measure in-circuit waveforms that are inherently differential signals, the differential probe extends the measurement capability of oscilloscopes in digital communication and high speed digital circuits.

4. Installation

a. Simply plug-in the BNC output connector to the vertical input of a general purposed oscilloscope or other measurement instrument, and connects the auxiliary grounding terminal to a proper ground. The measurement instrument must have a ground referenced.

b. Connect an appropriate power source (mains adaptor, battery pack or power lead) to this probe and then turn it on.

WARNING. To protect against electric shock, use only the accessories supplied with this probe.

c. Using the appropriate probe accessories, connect the inputs to the circuits under measurement.

CAUTION. This probe is to carry out differential measurement between two points on the circuit under measurement. This probe is not for electrically insulating the circuit under measurement and the measuring instrument.

Supporting your great ideas www.pewatron.com PEWATRON a member of the Angst + Pfister Group

5. Appearance

The differential probe looks as follows.

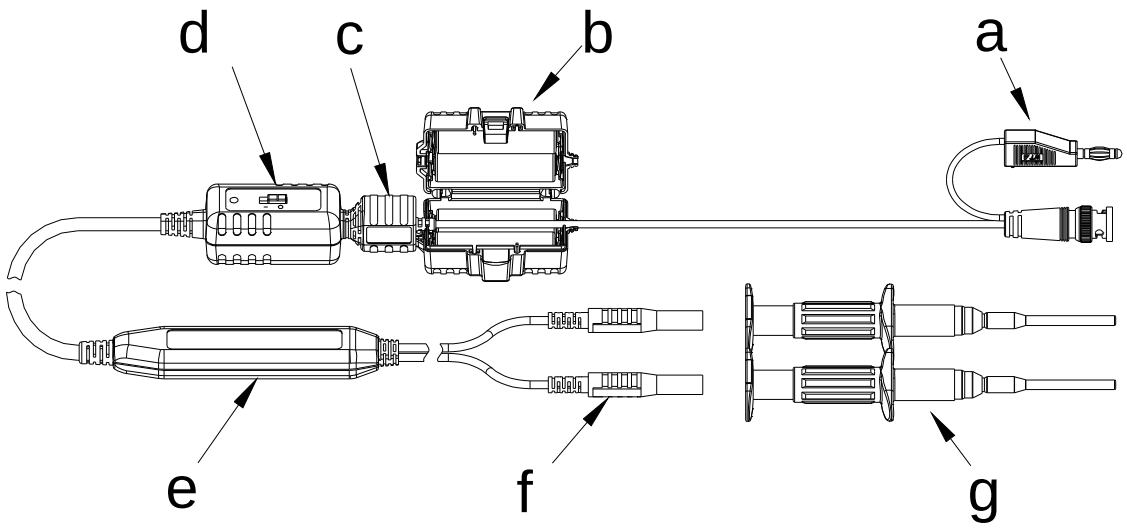

a. Output Cable: The BNC output connector and an auxiliary grounding terminal are connected to the oscilloscope.
b. Removable Battery Pack (optional): 4 x AA cells.
c. Power Source Connector:
   - This connector can be connected to the following sources;
   - Mains adaptor (6VDC/90mA or 9VDC/70mA) or
   - Removable battery pack (4 x AA cells) or
   - Power leads
d. Power Supply.
e. Probe Body.
f. The input leads of the differential probe.
g. Sprung Hooks: The sprung hooks are connected safely to test points in circuits.

Supporting your great ideas www.pewatron.com PEWATRON a member of the Angst + Pfister Group

6. Power Leads

Two types of power leads are offered;

a. Lemo® Lead: For the oscilloscope whose power connector is Lemo® connector.

b. Probus® Lead: For the oscilloscope whose power connector is Probus® connector.

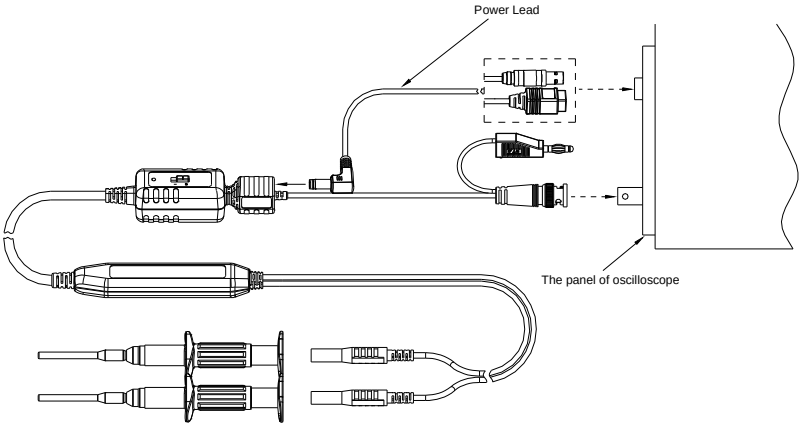

7. Removable Battery Pack

The following figure illustrates the operation of the removable battery pack;

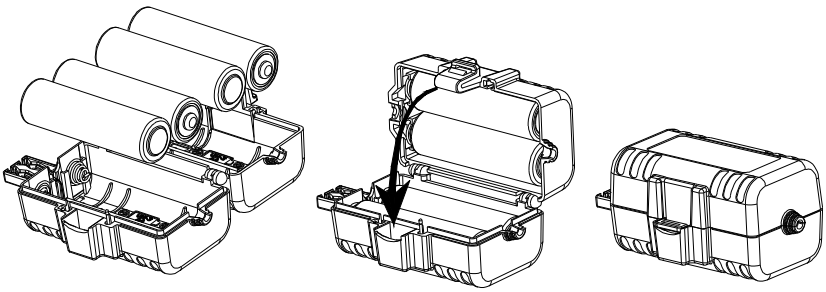

Supporting your great ideas www.pewatron.com PEWATRON a member of the Angst + Pfister Group

8. Specifications

Bandwidth	DC to 200MHz (-3dB)
Attenuation Ratio	1/10
Accuracy	±1%
Rise Time	1.75ns
Input Impedance	500kΩ//7pF each side ground
Input Voltage*	
- Differential Range	±20V
- Common Mode Range	±60V
- Absolute Max. Voltage (either input to ground)	±60V
Output	
- Swing (into 50Ω load)	±2V
- Offset (typical)	<±2mV
- Noise (typical)	0.3mVrms
- Source Impedance (typical)	50Ω (for using 50Ω input system oscilloscope)
CMRR (typical)	-80dB @100Hz, -50dB @10MHZ
Power Requirements (Three options of power sources)	Mains adaptor (6VDC/90mA or 9VDC/70mA) or Removable battery pack (4xAAcells) or Power leads
Optional Extension Plugs for Mains Adaptor	
- Input	One jack of 1A current rating
- Output	Three plugs of 1A current rating
Ambient Operating Temperature	-10 to 40℃
Ambient Storage Temperature	-30 to 70℃
Ambient Operating Humidity	25 to 85% RH
Ambient Storage Humidity	25 to 85% RH
Length of BNC Cable	125cm
Length of Input Leads	50cm
Weight	300gms
Dimensions (LxWxH)	111mm x 22mm x 14mm

* Voltage limit is the lesser of the DC+Peak AC and RMS values..

** a. The supplied voltage must be less than 16V and greater than 3.3V, otherwise the probe could be damaged or can't be operated properly.

b. For wrong polarity of power sources, a built-in circuit will protect the probe and no danger or damage will occur.

c. When the voltage of the cells become too low, the power indicator on the panel will change its color and then distinguish.

Supporting your great ideas www.pewatron.com PEWATRON a member of the Angst + Pfister Group

10. Derating Cure

The derating curves of the absolute maximum input voltages (either input to ground) is illustrate as follows;

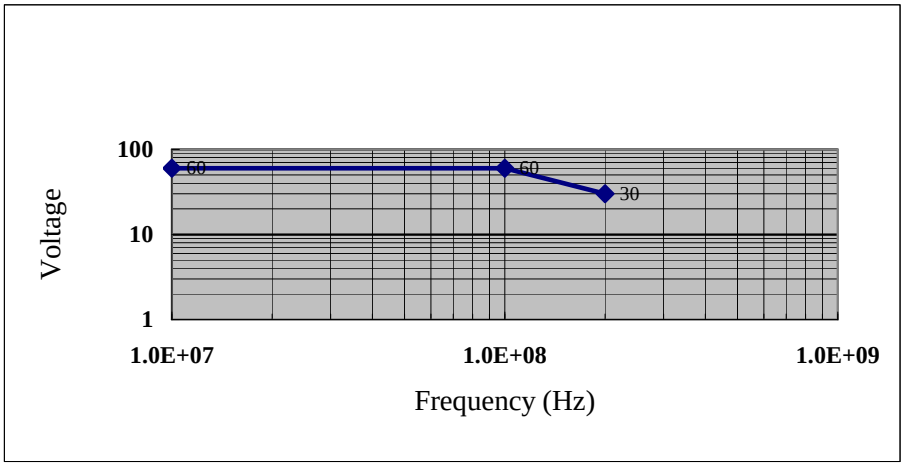

11. Inspection Procedure

a. Connect the BNC output connector to the vertical input of a general purposed oscilloscope.
b. Connect an appropriate power source to this probe and then turn it on.
c. Set the oscilloscope to DC coupling and 1V/div. Center the trace on the display.
d. Connect the inputs of the probe to a sine-wave signal source of 1KHz and 20Vp-p.
e. Then, a 1KHz sine-wave of 1V amplitude will be displayed on the screen of the oscilloscope and this means the probe is working properly.

12. Cleaning

Use a soft cloth to clean the dirt. Prevent damage to probe.

a. Avoid immersing the probe.
b. Avoid using abrasive cleaners.
c. Avoid using chemicals contains benzene or similar solvents.

Lemo® and Probus® are the registered trademarks

Date: June 1,2004

PEWATRON
a member of the Angst + Pfister Group

We are here for you. Addresses and Contacts

Sales Switzerland

Postcode 3000 – 9999
Liechtenstein

Matthias Rüegg
Ruhbergstrasse 32
CH-9230 Flawil

Phone + 41 44 877 35 18
Mobile + 41 76 491 66 66
Fax + 41 44 877 35 19

matthias.rueegg@pewatron.com

Postcode 1000 – 2999

Raffael Favaretto
Route d'Oron 124
CH-1673 Promasens

Phone + 41 44 877 35 22
Mobile + 41 76 444 63 14
Fax + 41 44 877 35 23

raffael.favaretto@pewatron.com

Sales Germany

Postcode 60000 – 79999

Dieter Hirthe
Mühlweg 23
D-71554 Weissach i.T.

Phone + 49 719 149 60 58
Mobile + 49 163 762 74 30
Fax + 49 719 193 31 88

dieter.hirthe@pewatron.com

Postcode 10000 – 59999
Postcode 80000 – 99999

Kurt Stritzelberger
Neumarkter Str. 86a
D-81673 Munich

Phone + 49 89 260 38 47
Mobile + 49 171 803 41 35
Fax + 49 89 43 10 91 91

kurt.stritzelberger@pewatron.com

Key Accounts
Aerospace and Defence

Claus Wübbena
Vogelkamp 26
D-26655 Westerstede

Phone + 49 4488 5204 614
Mobile + 49 173 9700 691
Fax + 49 4488 5204 616

claus.wuebbena@pewatron.com

Sales Austria

Kurt Stritzelberger
Neumarkter Str. 86a
D-81673 Munich

Phone + 49 89 260 38 47
Mobile + 49 17 18 03 41 35
Fax + 49 89 43 10 91 91

kurt.stritzelberger@pewatron.com

Sales Other Countries / Product Management

Sensors

Physical Sensors
Data Acquisition

Peter Felder
Phone + 41 44 877 35 05
peter.felder@pewatron.com

Geometrical Sensors

Eric Letsch
Phone + 41 44 877 35 14
eric.letsch@pewatron.com

Power Supplies

DC-DC Converters
Switching Power Supplies
DC-AC Inverters

Sebastiano Leggio
Phone + 41 44 877 35 06
sebastiano.leggio@pewatron.com

E-Components

Current Sensors
Man Machine Interface
Measurement Probes

Sebastiano Leggio
Phone + 41 44 877 35 06
sebastiano.leggio@pewatron.com

PEWATRON AG
Thurgauerstrasse 66
CH-8052 Zurich

Phone + 41 44 877 35 00
Fax + 41 44 877 35 25

www.pewatron.com
info@pewatron.com