MEAN WELL

480W Single Output Industrial DIN RAIL Power Supply

WDR-480 series

■ Features :

- Single and two phase wide input range 180~550VAC
- Built-in active PFC circuit compliance to EN61000-3-2
- High efficiency 93% and low power dissipation
- Protections: Short circuit / Overload / Over voltage / Over temperature
- Cooling by free air convection
- Can be installed on DIN rail TS-35/7.5 or 15
- UL 508(industrial control equipment)approved
- EN61000-6-2(EN50082-2) industrial immunity level
- Built-in DC OK relay contact
- 100% full load burn-in test
- 3 years warranty

SPECIFICATION

MODEL		WDR-480-24	WDR-480-48
OUTPUT	DC VOLTAGE	24V	48V
	RATED CURRENT	20A	10A
	CURRENT RANGE	0 ~ 20A	0 ~ 10A
	RATED POWER	480W	480W
	RIPPLE & NOISE (max.) Note.2	100mVp-p	150mVp-p
	VOLTAGE ADJ. RANGE	24 ~ 28V	48 ~ 55V
	VOLTAGE TOLERANCE Note.3	±1.0%	±1.0%
	LINE REGULATION	±0.5%	±0.5%
	LOAD REGULATION	±1.0%	±1.0%
	SETUP, RISE TIME	800ms, 150ms/400VAC 2000ms, 150ms/230VAC at full load	
	HOLD UP TIME (Typ.)	18ms / 400VAC 16ms / 230VAC at full load	
INPUT	VOLTAGE RANGE Note.6	180 ~ 550VAC 254 ~ 780VDC	
	FREQUENCY RANGE	47 ~ 63Hz	
	POWER FACTOR (Typ.)	PF≧0.84/400VAC PF≧0.84/230VAC	
	EFFICIENCY (Typ.)	92%	93%
	AC CURRENT (Typ.)	1.6A/400VAC 4A/230VAC	
	INRUSH CURRENT (Typ.)	COLD STAR 50A	
	LEAKAGE CURRENT	<3.5mA / 530VAC	
PROTECTION	OVERLOAD	105 ~ 130% rated output power	
		Protection type : Constant current limiting, unit will shut down after 3 sec. ,auto-recovery after 1 minute if the fault condition is removed	
	OVER VOLTAGE	29 ~ 33V	56 ~ 65V
		Protection type : Shut down o/p voltage, auto-recovery after 1 minute if the fault condition is removed	
	OVER TEMPERATURE	95℃±5℃ (TSW) detect on heatsink of power switch	
		Protection type : Shut down o/p voltage, recovers automatically after temperature goes down	
FUNCTION	DC OK REALY CONTACT RATINGS (max.)	60Vdc/0.3A, 30Vdc/1A, 30Vac/0.5A resistive load	
ENVIRONMENT	WORKING TEMP. Note.5	-30 ~ +70℃ (Refer to "Derating Curve")	
	WORKING HUMIDITY	20 ~ 95% RH non-condensing	
	STORAGE TEMP., HUMIDITY	-40 ~ +85℃, 10 ~ 95% RH	
	TEMP. COEFFICIENT	±0.03%/℃ (0 ~ 50℃)	
	VIBRATION	Component:10 ~ 500Hz, 2G 10min./1cycle, 60min. each along X, Y, Z axes; Mounting: Compliance to IEC60068-2-6	
SAFETY & EMC (Note 4)	SAFETY STANDARDS	UL508 approved, IEC60950-1 CB approved by SIQ, design refer to GL	
	WITHSTAND VOLTAGE	I/P-O/P:3KVAC I/P-FG:1.5KVAC O/P-FG:0.5KVAC O/P-DC OK:0.5KVAC	
	ISOLATION RESISTANCE	I/P-O/P, I/P-FG, O/P-FG:>100M Ohms / 500VDC / 25℃/ 70% RH	
	EMC EMISSION	Compliance to EN55022 (CISPR22), EN61204-3 Class B, EN61000-3-2,-3	
	EMC IMMUNITY	Compliance to EN61000-4-2,3,4,5,6,8,11, EN55024, EN61000-6-2 (EN50082-2), EN61204-3, heavy industry level, criteria A approved	
OTHERS	MTBF	112.8Khrs min. MIL-HDBK-217F (25℃)	
	DIMENSION	85.5*125.2*128.5mm (W*H*D)	
	PACKING	1.7Kg; 8pcs/14.6Kg/0.9CUFT	
NOTE	1. All parameters NOT specially mentioned are measured at 400VAC input, rated load and 25℃ of ambient temperature. 2. Ripple & noise are measured at 20MHz of bandwidth by using a 12" twisted pair-wire terminated with a 0.1uf & 47uf parallel capacitor. 3. Tolerance : includes set up tolerance, line regulation and load regulation. 4. The power supply is considered a component which will be installed into a final equipment. The final equipment must be re-confirmed that it still meets EMC directives. 5. Installation clearances : 40mm on top, 20mm on the bottom, 5mm on the left and right side are recommended when loaded permanently with full power. In case the adjacent device is a heat source, 15mm clearance is recommended. 6. Derating may be needed under low input voltage. Please check the derating curve for more details.	

File Name:WDR-480-SPEC 2011-11-28

MEAN WELL

480W Single Output Industrial DIN RAIL Power Supply

WDR-480 series

■ Mechanical Specification

Case No.984B Unit:mm

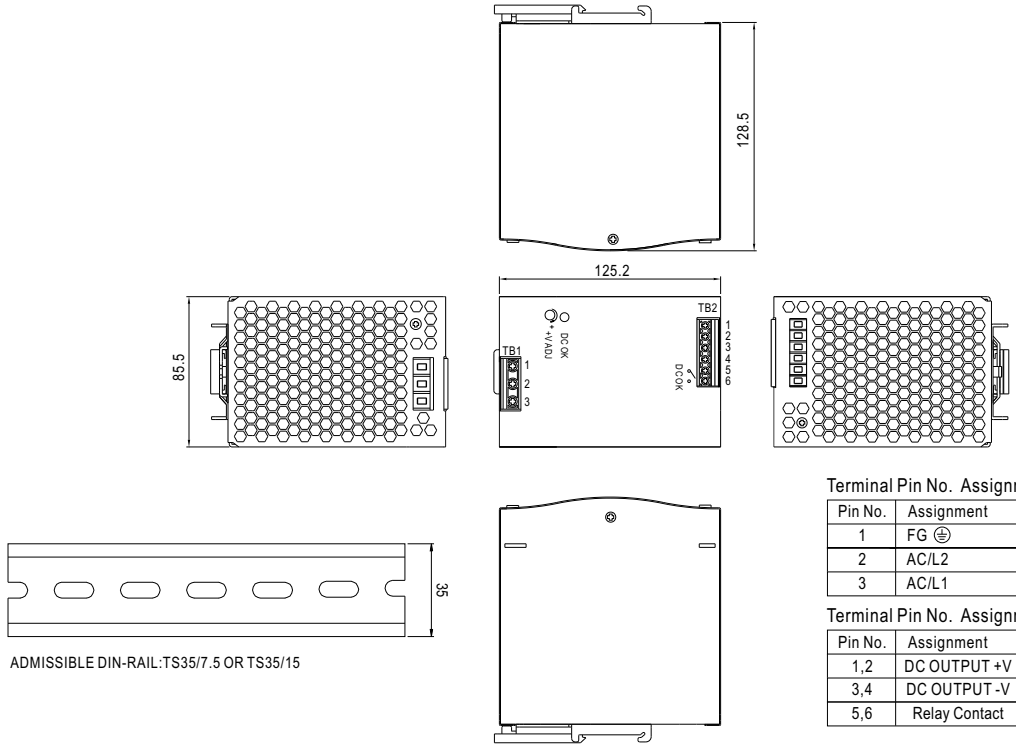

ADMISSIBLE DIN-RAIL:TS35/7.5 OR TS35/15

Terminal Pin No. Assignment (TB1)

Pin No.	Assignment
1	FG ⏚
2	AC/L2
3	AC/L1

Terminal Pin No. Assignment (TB2)

Pin No.	Assignment
1,2	DC OUTPUT +V
3,4	DC OUTPUT -V
5,6	Relay Contact

■ Block Diagram

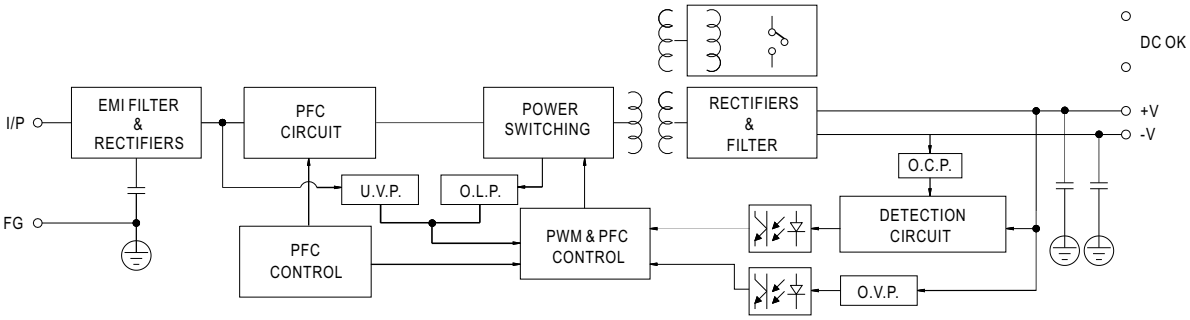

■ DC OK Relay Contact

Contact Close	PSU turns on / DC OK.
Contact Open	PSU turns off / DC Fail.
Contact Ratings (max.)	30V/1A resistive load.

File Name:WDR-480-SPEC 2011-11-28

■ Derating Curve

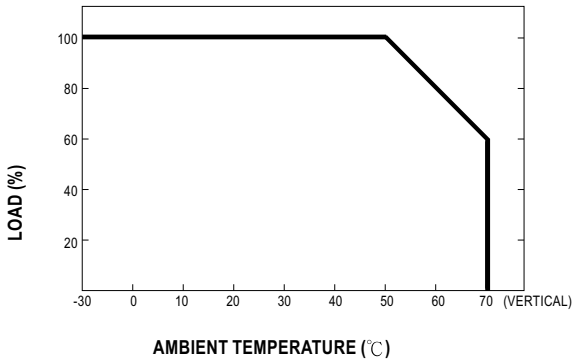

■ Output derating VS input voltage

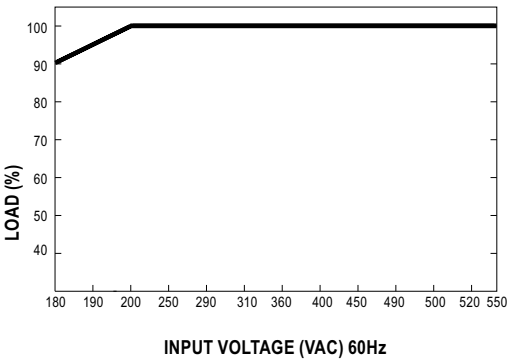

Supporting your great ideas www.pewatron.com PEWATRON a member of the Angst + Pfister Group

PEWATRON
a member of the Angst + Pfister Group

We are here for you. Addresses and Contacts

Sales Switzerland

Postcode 3000 – 9999
Liechtenstein

Matthias Rüegg
Ruhbergstrasse 32
CH-9230 Flawil

Phone + 41 44 877 35 18
Mobile + 41 76 491 66 66
Fax + 41 44 877 35 19

matthias.rueegg@pewatron.com

Postcode 1000 – 2999

Raffael Favaretto
Route d'Oron 124
CH-1673 Promasens

Phone + 41 44 877 35 22
Mobile + 41 76 444 63 14
Fax + 41 44 877 35 23

raffael.favaretto@pewatron.com

Sales Germany

Postcode 60000 – 79999

Dieter Hirthe
Mühlweg 23
D-71554 Weissach i.T.

Phone + 49 719 149 60 58
Mobile + 49 163 762 74 30
Fax + 49 719 193 31 88

dieter.hirthe@pewatron.com

Postcode 10000 – 59999
Postcode 80000 – 99999

Kurt Stritzelberger
Neumarkter Str. 86a
D-81673 Munich

Phone + 49 89 260 38 47
Mobile + 49 171 803 41 35
Fax + 49 89 43 10 91 91

kurt.stritzelberger@pewatron.com

Key Accounts
Aerospace and Defence

Claus Wübbena
Vogelkamp 26
D-26655 Westerstede

Phone + 49 4488 5204 614
Mobile + 49 173 9700 691
Fax + 49 4488 5204 616

claus.wuebbena@pewatron.com

Sales Austria

Kurt Stritzelberger
Neumarkter Str. 86a
D-81673 Munich

Phone + 49 89 260 38 47
Mobile + 49 17 18 03 41 35
Fax + 49 89 43 10 91 91

kurt.stritzelberger@pewatron.com

Sales Other Countries / Product Management

Sensors

Physical Sensors
Data Acquisition

Peter Felder
Phone + 41 44 877 35 05
peter.felder@pewatron.com

Geometrical Sensors

Eric Letsch
Phone + 41 44 877 35 14
eric.letsch@pewatron.com

Power Supplies

DC-DC Converters
Switching Power Supplies
DC-AC Inverters

Sebastiano Leggio
Phone + 41 44 877 35 06
sebastiano.leggio@pewatron.com

E-Components

Current Sensors
Man Machine Interface
Measurement Probes

Sebastiano Leggio
Phone + 41 44 877 35 06
sebastiano.leggio@pewatron.com

PEWATRON AG
Thurgauerstrasse 66
CH-8052 Zurich

Phone + 41 44 877 35 00
Fax + 41 44 877 35 25

www.pewatron.com
info@pewatron.com