MEAN WELL

20~25W AC-DC Single Output Desktop

GS25B series

■ Features :

- Universal AC input / Full range
- No load power consumption<0.5W
- Pass energy star(CEC) level Ⅳ regulation
- Meet EISA 2007 (Energy Independence and Security Act)
- 2 pole AC Inlet IEC320-C8
- Class Ⅱ power (without earth pin)
- Full output 5~48V safety approval
- Protections: Short circuit / Overload / Over voltage
- Fully enclosed plastic case
- LED indicator for power on
- Approvals: UL / CUL / TUV / BSMI / CB / FCC / CE
- Pass LPS for 9~48V output
- 2 years warranty

SPECIFICATION

ORDER NO.		GS25B05-P1J	GS25B07-P1J	GS25B09-P1J	GS25B12-P1J	GS25B15-P1J	GS25B18-P1J	GS25B24-P1J	GS25B28-P1J	GS25B48-P1J
OUTPUT	SAFETY MODEL NO.	GS25B05	GS25B07	GS25B09	GS25B12	GS25B15	GS25B18	GS25B24	GS25B28	GS25B48
	DC VOLTAGE Note.2	5V	7.5V	9V	12V	15V	18V	24V	28V	48V
	RATED CURRENT	4.0A	2.93A	2.77A	2.08A	1.66A	1.38A	1.04A	0.89A	0.52A
	CURRENT RANGE	0 ~ 4.0A	0 ~ 2.93A	0 ~ 2.77A	0 ~ 2.08A	0 ~ 1.66A	0 ~ 1.38A	0 ~ 1.04A	0 ~ 0.89A	0 ~ 0.52A
	RATED POWER (max.)	20W	22W	25W	25W	25W	25W	25W	25W	25W
	RIPPLE & NOISE (max.) Note.3	50mVp-p	80mVp-p	80mVp-p	80mVp-p	100mVp-p	150mVp-p	180mVp-p	240mVp-p	240mVp-p
	VOLTAGE TOLERANCE Note.4	±5.0%	±5.0%	±5.0%	±3.0%	±3.0%	±3.0%	±2.0%	±2.0%	±2.0%
	LINE REGULATION Note.5	±1.0%	±1.0%	±1.0%	±1.0%	±1.0%	±1.0%	±1.0%	±1.0%	±1.0%
	LOAD REGULATION Note.6	±5.0%	±5.0%	±5.0%	±3.0%	±3.0%	±3.0%	±2.0%	±2.0%	±2.0%
	SETUP, RISE, HOLD UP TIME	500ms, 20ms, 50ms/230VAC 500ms, 20ms, 15ms/115VAC at full load								
INPUT	VOLTAGE RANGE	90 ~ 264VAC 135 ~ 370VDC								
	FREQUENCY RANGE	47 ~ 63Hz								
	EFFICIENCY (Typ.)	74%	78%	79%	81%	82%	82%	83%	83%	84%
	AC CURRENT	0.7A/100VAC								
	INRUSH CURRENT (max.)	45A/230VAC								
	LEAKAGE CURRENT(max.)	0.25mA / 240VAC								
PROTECTION	OVERLOAD	110 ~ 150% rated output power								
		Protection type : Hiccup mode, recovers automatically after fault condition is removed								
	OVER VOLTAGE	105 ~ 135% rated output voltage								
		Protection type : Clamp by zener diode								
ENVIRONMENT	WORKING TEMP.	0 ~ +50℃ (Refer to output load derating curve)								
	WORKING HUMIDITY	20% ~ 90% RH non-condensing								
	STORAGE TEMP., HUMIDITY	-20 ~ +85℃, 10 ~ 95% RH								
	TEMP. COEFFICIENT	±0.03% / ℃ (0 ~ 50℃)								
	VIBRATION	10 ~ 500Hz, 2G 10min./1cycle, period for 60min. each along X, Y, Z axes								
SAFETY & EMC (Note. 7)	SAFETY STANDARDS	UL60950-1, CSA C22.2, TUV EN60950-1, BSMI CNS14336 approved								
	WITHSTAND VOLTAGE	I/P-O/P:4242VDC								
	ISOLATION RESISTANCE	I/P-O/P:100M Ohms / 500VDC / 25℃/ 70% RH								
	EMI CONDUCTION & RADIATION	Compliance to EN55022 class B, FCC PART 15 / CISPR22 class B, CNS13438 class B								
	HARMONIC CURRENT	Compliance to EN61000-3-2,3								
	EMS IMMUNITY	Compliance to EN61000-4-2,3,4,5,6,8,11, light industry level, criteria A								
OTHERS	MTBF	500Khrs min. MIL-HDBK-217F(25℃)								
	DIMENSION	79*54*33mm (L*W*H)								
	PACKING	210g ; 60pcs / 13.5Kg / CARTON								
CONNECTOR	PLUG	Standard type P1J: 2.1ϕ * 5.5ϕ * 11mm, turning fork type, centre positive for stock ; Other type available by customer requested								
	CABLE	Standard type UL1185 6ft (4FT only for 5V output) for stock ; Other type available by customer requested								
NOTE	1.All parameters are specified at 230VAC input, rated load, 25℃ 70% RH ambient. 2.DC voltage: The output voltage set at point measure by plug terminal & 50% load. 3.Ripple & noise are measured at 20MHz by using a 12" twisted pair terminated with a 0.1uf & 47uf capacitor. 4.Tolerance: includes set up tolerance, line regulation, load regulation. 5.Line regulation is measured from low line to high line at rated load. 6.Load regulation is measured from 20% to 100% rated load 7.The power supply is considered a component which will be installed into a final equipment. The final equipment must be re-confirmed that it still meets EMC directives.									

File Name:GS25B-SPEC 2008-05-08

MEAN WELL

20~25W AC-DC Single Output Desktop

GS25B series

■ Mechanical Specification

Unit:mm

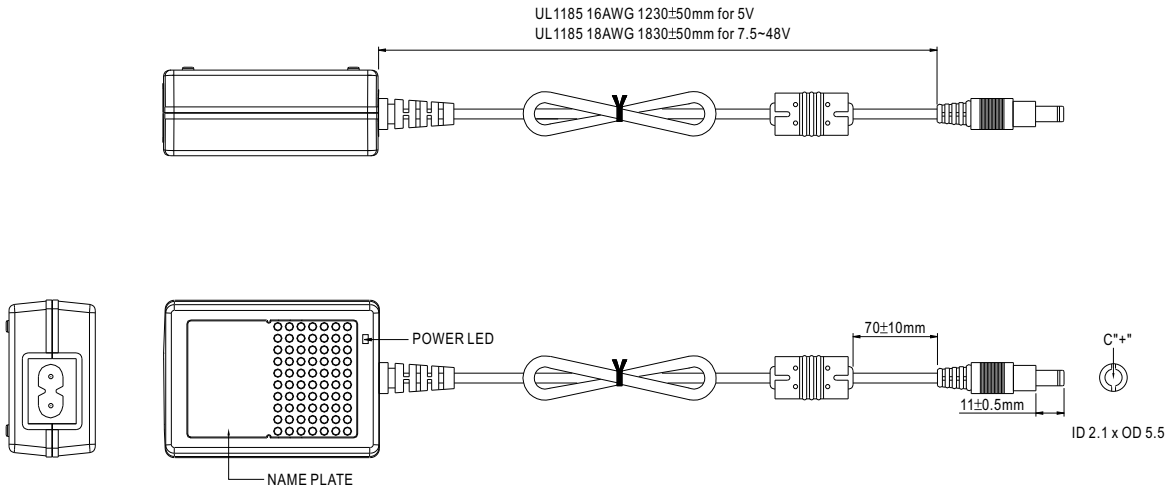

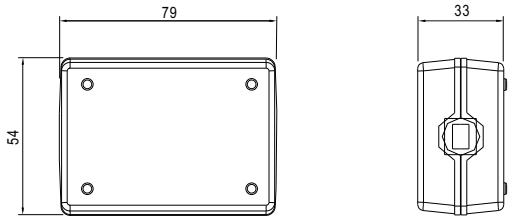

■ Plug Assignment

Standard plug: P1J (option)

P1J	
P/N	OUTPUT
CENTER	+

■ Derating Curve

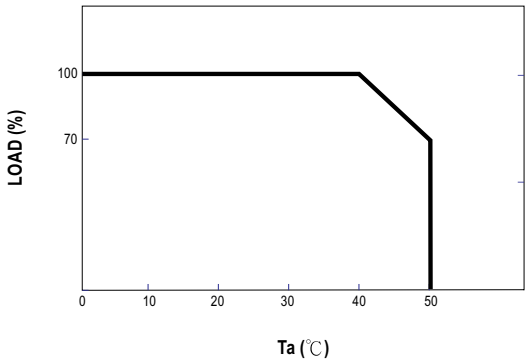

■ Static Characteristics

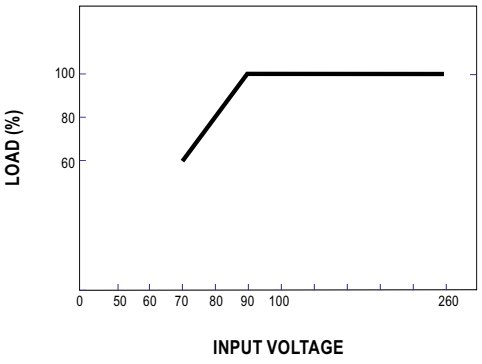

File Name:GS25B-SPEC 2008-05-08

PEWATRON
a member of the Angst + Pfister Group

We are here for you. Addresses and Contacts

Sales Switzerland

Postcode 3000 – 9999
Liechtenstein

Matthias Rüegg
Ruhbergstrasse 32
CH-9230 Flawil

Phone + 41 44 877 35 18
Mobile + 41 76 491 66 66
Fax + 41 44 877 35 19

matthias.rueegg@pewatron.com

Postcode 1000 – 2999

Raffael Favaretto
Route d'Oron 124
CH-1673 Promasens

Phone + 41 44 877 35 22
Mobile + 41 76 444 63 14
Fax + 41 44 877 35 23

raffael.favaretto@pewatron.com

Sales Germany

Postcode 60000 – 79999

Dieter Hirthe
Mühlweg 23
D-71554 Weissach i.T.

Phone + 49 719 149 60 58
Mobile + 49 163 762 74 30
Fax + 49 719 193 31 88

dieter.hirthe@pewatron.com

Postcode 10000 – 59999
Postcode 80000 – 99999

Kurt Stritzelberger
Neumarkter Str. 86a
D-81673 Munich

Phone + 49 89 260 38 47
Mobile + 49 171 803 41 35
Fax + 49 89 43 10 91 91

kurt.stritzelberger@pewatron.com

Key Accounts
Aerospace and Defence

Claus Wübbena
Vogelkamp 26
D-26655 Westerstede

Phone + 49 4488 5204 614
Mobile + 49 173 9700 691
Fax + 49 4488 5204 616

claus.wuebbena@pewatron.com

Sales Austria

Kurt Stritzelberger
Neumarkter Str. 86a
D-81673 Munich

Phone + 49 89 260 38 47
Mobile + 49 17 18 03 41 35
Fax + 49 89 43 10 91 91

kurt.stritzelberger@pewatron.com

Sales Other Countries / Product Management

Sensors

Physical Sensors
Data Acquisition

Peter Felder
Phone + 41 44 877 35 05
peter.felder@pewatron.com

Geometrical Sensors

Eric Letsch
Phone + 41 44 877 35 14
eric.letsch@pewatron.com

Power Supplies

DC-DC Converters
Switching Power Supplies
DC-AC Inverters

Sebastiano Leggio
Phone + 41 44 877 35 06
sebastiano.leggio@pewatron.com

E-Components

Current Sensors
Man Machine Interface
Measurement Probes

Sebastiano Leggio
Phone + 41 44 877 35 06
sebastiano.leggio@pewatron.com

PEWATRON AG
Thurgauerstrasse 66
CH-8052 Zurich

Phone + 41 44 877 35 00
Fax + 41 44 877 35 25

www.pewatron.com
info@pewatron.com