PROTEK POWER

180 WATT SWITCHING POWER SUPPLIES

PUP180 SERIES

CE

IV ENERGY STAR

RoHS

DESCRIPTION

The PUP180 series of AC/DC switching power supplies are for 180 watts of continuous output power. They are enclosed in a 94V-1 rated polyphenylene-oxide case with an IEC 320/C14 or C6 inlet to mate with interchangeable cord for world-wide use. All model meet CISPR 22 and FCC class B emission limits, and comply with UL,CSA,IEC and CE requirements.

Note: Warranty period for PUP180 series is one year.

FEATURES

- High Efficiency
- Low Ripple & Noise
- Overvoltage protection
- Short-circuit protection
- Overpower protection
- Over temperature protection
- 100%burn-in at full rated load
- Compliant with CEC and Energy Star efficiency level IV requirements
  - * No load power consumption less than 0.5W
  - * Average active efficiency ≧ 85%(IV) & ≧87%(V)
- Compliant with RoHS requirements

Safety Standard Approvals :

UL 60950, CSA C22.2 NO. 60950

TÜV EN60950-1

CE Mark

CB Report

INPUT SPECIFICATIONS

Input voltage :	90 to 264 VAC
Input frequency :	47 to 63 Hz
Input current :	2.5A (rms) for 115 VAC 1.25A (rms) for 230 VAC
Earth leakage current: (Touch current)	150uA max. @ 115 VAC, 60 Hz 250uA max. @ 230 VAC, 50 Hz

OUTPUT SPECIFICATIONS

Output voltage/current :	See rating chart
Total output power :	See rating chart
Ripple and noise :	380mV peak to peak maximum
Overvoltage protection :	Set at 110-140%of its nominal output voltage
Overcurrent protection :	All models protected to short circuit conditions
Temperature coefficient :	All outputs ±0.04%/□ maximum
Transient response :	±10% Maximum. Output load step is : (1) 0% ~ 50% (2) 50% ~ 100% Slew Rate = 0.5A/uS Frequency is 100 Hz and 1 KHz

ENVIRONMENTAL SPECIFICATIONS

Operating temperature :	0□to +40□
Storage temperature :	-20□to +80□
Relative humidity :	10% to 90% non-condensing

GENERAL SPECIFICATIONS

Hold-up time :	5 mS minimum at 100 VAC or 240 VAC
Turn on delay time :	3 S maximum at 100 VAC
Power Factor :	0.99 @115 Vac/60 Hz,Full load 0.95 @230 Vac/50 Hz,Full load
Efficiency :	87%minimum at 100 VAC or 240 VAC.
Inrush current :	No damage
Withstand voltage :	3000 VAC from input to output 1500 VAC from input to ground
MTBF :	100,000 hours at full load at 25□ ambient, calculated per MIL-HDBK- 217F

EMC Performance (EN55024)

EN55022:	Class B conducted, Class B radiated
FCC:	Class B conducted, Class B radiated
VCCI:	Class B conducted, Class B radiated
EN61000-3-2:	Harmonic distortion, Class D
EN61000-3-3:	Line flicker
EN61000-4-2:	ESD,± 8KV air and ± 4KV contact
EN61000-4-3:	Radiated immunity, 3V/m
EN61000-4-4:	Fast transient/burst, ± 1KV
EN61000-4-5:	Surge, ± 1KV diff., ± 2KV com.
EN61000-4-6:	Conducted immunity, 3Vrms
EN61000-4-8:	Magnetic field immunity, 1A/m
EN61000-4-11:	Voltage dips, 30% reduction for 500ms and >95%reduction for 10ms

Supporting your great ideas www.pewatron.com PEWATRON a member of the Angst + Pfister Group

UNIVERSAL INPUT PUP180 SERIES

OUTPUT VOLTAGE/CURRENT RATING CHART

MODEL	Vnom.	Output Imax.	Output Imin.	Tol.	Maximum Output Power
PUP180-13-1	18V	10.0A	0A	5%	180W
PUP180-13-2	19V	9.47A	0A	5%	180W
PUP180-14	24V	7.5A	0A	5%	180W
PUP180-18	48V	3.75A	0A	5%	180W

NOTE: 1. Ripple and noise: Peak to peak with 20MHz bandwidth and 47uF tantalum capacitor in parallel with a 0.1uF ceramic capacitor at rated line voltage and load ranges.
2. To order a model with IEC320/C6 inlet, add suffix "S" to the PUP180, e.g. PUP180S-14.

MECHANICAL SPECIFICATIONS

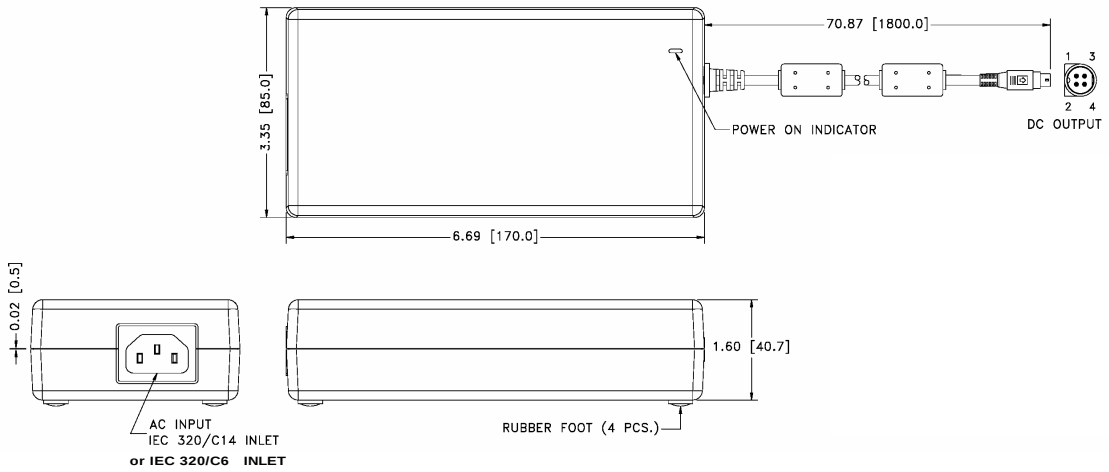

NOTES:
1. Dimensions shown in inches [mm]
2. Tolerance 0.02 [0.5] maximum
3. Weight: 860 grams approx.
4. See page 70 for optional output connector. Add the suffix assigned for a selected connector to a wanted model number, e.g. PUP180-14-B1, for ordering.

PIN CHART

MODEL \ PIN	1	2	3	4	Shell of connector
PUP180-13-1 PUP180-13-2 PUP180-14 PUP180-18	Output +V	Output +V	Return	Return	Return

Supporting your great ideas www.pewatron.com PEWATRON a member of the Angst + Pfister Group

PEWATRON
a member of the Angst + Pfister Group

We are here for you. Addresses and Contacts

Sales Switzerland

Postcode 3000 – 9999
Liechtenstein

Matthias Rüegg
Ruhbergstrasse 32
CH-9230 Flawil

Phone + 41 44 877 35 18
Mobile + 41 76 491 66 66
Fax + 41 44 877 35 19

matthias.rueegg@pewatron.com

Postcode 1000 – 2999

Raffael Favaretto
Route d'Oron 124
CH-1673 Promasens

Phone + 41 44 877 35 22
Mobile + 41 76 444 63 14
Fax + 41 44 877 35 23

raffael.favaretto@pewatron.com

Sales Germany

Postcode 60000 – 79999

Dieter Hirthe
Mühlweg 23
D-71554 Weissach i.T.

Phone + 49 719 149 60 58
Mobile + 49 163 762 74 30
Fax + 49 719 193 31 88

dieter.hirthe@pewatron.com

Postcode 10000 – 59999
Postcode 80000 – 99999

Kurt Stritzelberger
Neumarkter Str. 86a
D-81673 Munich

Phone + 49 89 260 38 47
Mobile + 49 171 803 41 35
Fax + 49 89 43 10 91 91

kurt.stritzelberger@pewatron.com

Key Accounts
Aerospace and Defence

Claus Wübbena
Vogelkamp 26
D-26655 Westerstede

Phone + 49 4488 5204 614
Mobile + 49 173 9700 691
Fax + 49 4488 5204 616

claus.wuebbena@pewatron.com

Sales Austria

Kurt Stritzelberger
Neumarkter Str. 86a
D-81673 Munich

Phone + 49 89 260 38 47
Mobile + 49 17 18 03 41 35
Fax + 49 89 43 10 91 91

kurt.stritzelberger@pewatron.com

Sales Other Countries / Product Management

Sensors

Physical Sensors
Data Acquisition

Peter Felder
Phone + 41 44 877 35 05
peter.felder@pewatron.com

Geometrical Sensors

Eric Letsch
Phone + 41 44 877 35 14
eric.letsch@pewatron.com

Power Supplies

DC-DC Converters
Switching Power Supplies
DC-AC Inverters

Sebastiano Leggio
Phone + 41 44 877 35 06
sebastiano.leggio@pewatron.com

E-Components

Current Sensors
Man Machine Interface
Measurement Probes

Sebastiano Leggio
Phone + 41 44 877 35 06
sebastiano.leggio@pewatron.com

PEWATRON AG
Thurgauerstrasse 66
CH-8052 Zurich

Phone + 41 44 877 35 00
Fax + 41 44 877 35 25

www.pewatron.com
info@pewatron.com