PROTEK POWER

450-480 WATT MEDICAL SWITCHING POWER SUPPLIES

DESCRIPTION

The PM450 series comprising single and multiple output models for 450-480 watts of continuous output power is specially designed for medical and ITE applications, not for life-supporting equipment. They operate at 90-264 VAC input voltage without the need of a selector strap. The units are constructed on a printed circuit board with a U-bracket for mechanical support and heat sinking. A cover-and-fan assembly can be added during manufacturing.

PM450 SERIES

CE (LVD)
RoHS

New!!

FEATURES

- EN61000-3-2 class A and D compliant
- Power Factor 0.98 typical
- Overvoltage protection
- Short-circuit protection
- Thermal protection
- Power Fail Detect (PFD)
- 100% burn-in at full rated load
- Remote sense on output #1 and output #2
- Remote inhibit – TTL high disables output
- Compliant with RoHS requirements

Safety Standard Approvals :

UL60601-1, CSA C22.2 No. 601.1
File No. E178020

UL 60950-1, CSA C22.2 No. 60950-1

TÜV EN60601-1

TÜV EN60950-1

INPUT SPECIFICATIONS

Input voltage :	90-264 VAC
Input frequency:	47-63 Hz
Input current :	7.1 A (rms) for 115 VAC 3.5 A (rms) for 230 VAC
Earth leakage current :	100 uA max.@115 VAC,60 Hz 165 uA max.@230 VAC,50 Hz

OUTPUT SPECIFICATIONS

Output voltage/current :	See rating chart
Total output power :	See rating chart
Ripple and Noise :	2% peak to peak maximum
Overvoltage protection :	Provided on output #1 only; set at 115-140% of its nominal output voltage
Overcurrent protection :	All outputs protected to short circuit conditions
Temperature coefficient :	All outputs ± 0.04% /℃ maximum
Transient response :	Maximum excursion of 4% or better on all models, recovering to 1% of final value within 500us after a 25% step load change
PFD signal :	TTL logic high for normal Operation and TTL logic low upon loss of input power. This signal appears at least 1ms prior to master output dropping 5% below its nominal value. This signal also provides a minimum delay of 100ms after master output is within regulation.
Remote inhibit :	Requires an external TTL high level signal to inhibit outputs for standard models.

ENVIRONMENTAL SPECIFICATIONS

Operating temperature :	0℃ to +70℃
Storage temperature :	-40℃ to +85℃
Relative humidity :	5% to 95% non-condensing
Derating :	Derate from 100% at +50℃ linearly to 50% at +70℃

GENERAL SPECIFICATIONS

Switching frequency :	60 KHz ±10 KHz
Power factor :	0.98 typical
Efficiency :	80% minimum on all models
Hold-up time :	12 msec minimum at 110 VAC
Line regulation :	±0.2% maximum at full load
Inrush current :	40 A @ 115 VAC or 80 A @ 230 at 25℃ cold start
Withstand voltage :	4000 VAC from input to output 1500 VAC from input to ground 500 VAC from output to ground
MTBF :	300,000 hours minimum at full load at 25℃ ambient, calculated per MIL-HDBK-217F
EMC Performance (EN60601-1-2)	
EN55011:	Class B conducted, Class A radiated
EN61000-3-2:	Harmonic distortion, Class A and D
EN61000-3-3:	Line flicker
EN61000-4-2:	ESD, ±8 KV air and ±6 KV contact
EN61000-4-3:	Radiated immunity, 3V /m
EN61000-4-4:	Fast transient/burst, ±2 KV
EN61000-4-5:	Surge, ±1 KV diff., ±2 KV com.
EN61000-4-6:	Conducted immunity, 3 V/ms
EN61000-4-8:	Magnetic field immunity, 3 A/m
EN61000-4-11:	Voltage dips, 30% reduction for 500 ms, 60% reduction for 100ms and >95% reduction for 10ms

Supporting your great ideas www.pewatron.com PEWATRON a member of the Angst + Pfister Group

UNIVERSAL PM450 MEDICAL SERIES

OUTPUT VOLTAG/CURRENT RATING CHART

	Output # 1				Output # 2				Output # 3				Maximum Output
MODEL	Vnom.	Imin.	Imax.	Tol.	Vnom.	Imin.	Imax.	Tol.	Vnom.	Imin.	Imax.	Tol.	Power
PM450-12	12V	0A	37.5A	2%									450W
PM450-13	15V	0A	30A	2%									450W
PM450-14	24V	0A	18.75A	2%									450W
PM450-15	27V	0A	16.7A	2%									450W
PM450-16	30V	0A	15A	2%									450W
PM450-17-1	40V	0A	12A	2%									480W
PM450-18	48V	0A	10A	2%									480W
PM450-19	55V	0A	8.73A	2%									480W
PM450-20	24V	1.0A	12A	2%	12V	1.0A	17A	5%					450W
PM450-21	24V	1.0A	12A	2%	15V	0.75A	15A	5%					450W
PM450-22	48V	0.5A	6A	2%	24V	0.5A	10A	5%					450W
PM450-23	48V	0.5A	6A	2%	12V	1.0A	17A	5%					450W
PM450-24	48V	0.5A	6A	2%	15V	0.75A	15A	5%					450W
PM450-30	24V	1.0A	12A	2%	12V	1.0A	17A	5%	3.3V	0A	8A	3%	450W
PM450-31	24V	1.0A	12A	2%	15V	0.75A	15A	5%	3.3V	0A	8A	3%	450W
PM450-32	24V	1.0A	12A	2%	12V	1.0A	17A	5%	5.1V	0A	8A	3%	450W
PM450-33	24V	1.0A	12A	2%	15V	0.75A	15A	5%	5.1V	0A	8A	3%	450W
PM450-34	48V	0.5A	6A	2%	12V	1.0A	17A	5%	3.3V	0A	8A	3%	450W
PM450-35	48V	0.5A	6A	2%	15V	0.75A	15A	5%	3.3V	0A	8A	3%	450W
PM450-36	48V	0.5A	6A	2%	12V	1.0A	17A	5%	5.1V	0A	8A	3%	450W
PM450-37	48V	0.5A	6A	2%	15V	0.75A	15A	5%	5.1V	0A	8A	3%	450W

NOTES:
1. Add suffix “B” for U-bracket format or “C” for enclosed format with fan control function, e.g. PM450-14C.
2. All outputs are floating. It can be connected externally for positive or negative output.
3. Output #1 can be adjusted within ±5% of its nominal voltage.
4. Output #3 can be adjusted within ±15% of its nominal voltage.
5. 450-480 watts for “C” version with cover-and-fan assembly. 225-240 watts for “B” version without moving air (maximum current of output #1 & 2 derated to 50%), or 450 watts with 40 CFM forced air provided by user.
6. All models may operate at no-load. At no-load, output voltage tolerance increases to 10%.

MECHANICAL SPECIFICATIONS

Single Output Models

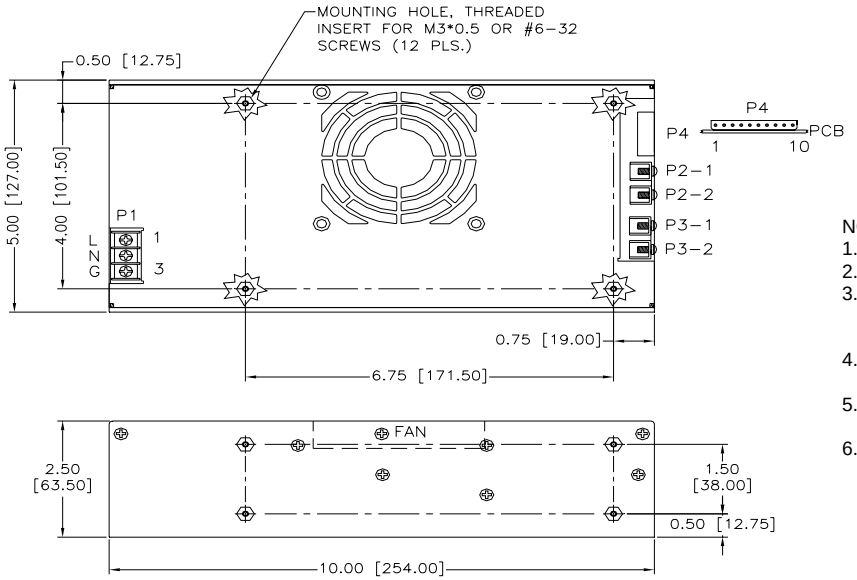

NOTES:
1. Dimensions shown in inches [mm].
2. Tolerance 0.02 [0.5] maximum.
3. Input connector P1 is Dinkle DT-35-B01W-03 with M3, nickel plated screws.
4. Connector P4 mates with Molex housing 50-37-5103 and pins 5263.
5. P2-1, P2-2, P3-1 & P3-2: M3*0.5 screw connections.
6. Weight: 1.8Kgs

Supporting your great ideas www.pewatron.com PEWATRON a member of the Angst + Pfister Group

UNIVERSAL PM450 MEDICAL SERIES

MECHANICAL SPECIFICATIONS

Multiple Output Models

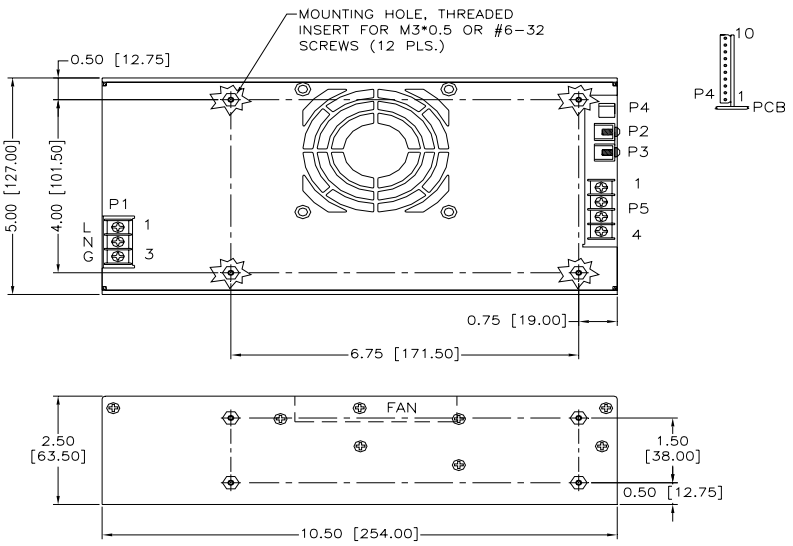

NOTES:
1. Dimensions shown in inches [mm].
2. Tolerance 0.02 [0.5] maximum.
3. Input connector P1 is Dinkle DT-35-B01W-03 with M3, nickel plated screws.
4. Connector P4 mates with Molex housing 50-37-5103 and pins 5263.
5. P2, P3: M*0.05 screw connections.
6. Output connector P5 is Dinkle DT-35-B01W-04 with M3, nickel plated screws.
7. Weight: 1.9 kgs

PIN CHART

Single Output Models

MODEL / CONN / PIN		P1 (AC)			P2	P3	P4			
		1	2	3			1	2	3	4
PM450-12 PM450-14 PM450-16 PM450-18	PM450-13 PM450-15 PM450-17-1 PM450-19	LIVE	NEUTRAL	GROUND	+V	−V	SIGNAL GROUND (−V)	+S (V)	−S (V)	PFD

MODEL / CONN / PIN		P4					
		5	6	7	8	9	10
PM450-12 PM450-14 PM450-16 PM450-18	PM450-13 PM450-15 PM450-17-1 PM450-19	INHIBIT +Ve	INHIBIT -Ve	N.C.	N.C.	0V (FAN)	FAN

Multiple Output Models

MODEL / CONN / PIN		P1 (AC)			P2	P3	P4			
		1	2	3			1	2	3	4
PM450-20 PM450-22 PM450-24 PM450-31 PM450-33 PM450-35 PM450-37	PM450-21 PM450-23 PM450-30 PM450-32 PM450-34 PM450-36	LIVE	NEUTRAL	GROUND	+V1	−V1	SIGNAL GROUND (−V)	+S (V1)	−S (V1)	PFD

MODEL / CONN / PIN		P4						P5			
		5	6	7	8	9	10	1	2	3	4
PM450-20 PM450-22 PM450-24	PM450-21 PM450-23	INHIBIT +Ve	INHIBIT -Ve	+S (V2)	−S (V2)	0V (FAN)	FAN	+V2	−V2	N.C.	N.C.
PM450-30 PM450-32 PM450-34 PM450-36	PM450-31 PM450-33 PM450-35 PM450-37							+V2	−V2	+V3	−V3

Supporting your great ideas www.pewatron.com PEWATRON a member of the Angst + Pfister Group

PEWATRON
a member of the Angst + Pfister Group

We are here for you. Addresses and Contacts

Sales Switzerland

Postcode 3000 – 9999
Liechtenstein

Matthias Rüegg
Ruhbergstrasse 32
CH-9230 Flawil

Phone + 41 44 877 35 18
Mobile + 41 76 491 66 66
Fax + 41 44 877 35 19

matthias.rueegg@pewatron.com

Postcode 1000 – 2999

Raffael Favaretto
Route d'Oron 124
CH-1673 Promasens

Phone + 41 44 877 35 22
Mobile + 41 76 444 63 14
Fax + 41 44 877 35 23

raffael.favaretto@pewatron.com

Sales Germany

Postcode 60000 – 79999

Dieter Hirthe
Mühlweg 23
D-71554 Weissach i.T.

Phone + 49 719 149 60 58
Mobile + 49 163 762 74 30
Fax + 49 719 193 31 88

dieter.hirthe@pewatron.com

Postcode 10000 – 59999
Postcode 80000 – 99999

Kurt Stritzelberger
Neumarkter Str. 86a
D-81673 Munich

Phone + 49 89 260 38 47
Mobile + 49 171 803 41 35
Fax + 49 89 43 10 91 91

kurt.stritzelberger@pewatron.com

Key Accounts
Aerospace and Defence

Claus Wübbena
Vogelkamp 26
D-26655 Westerstede

Phone + 49 4488 5204 614
Mobile + 49 173 9700 691
Fax + 49 4488 5204 616

claus.wuebbena@pewatron.com

Sales Austria

Kurt Stritzelberger
Neumarkter Str. 86a
D-81673 Munich

Phone + 49 89 260 38 47
Mobile + 49 17 18 03 41 35
Fax + 49 89 43 10 91 91

kurt.stritzelberger@pewatron.com

Sales Other Countries / Product Management

Sensors

Physical Sensors
Data Acquisition

Peter Felder
Phone + 41 44 877 35 05
peter.felder@pewatron.com

Geometrical Sensors

Eric Letsch
Phone + 41 44 877 35 14
eric.letsch@pewatron.com

Power Supplies

DC-DC Converters
Switching Power Supplies
DC-AC Inverters

Sebastiano Leggio
Phone + 41 44 877 35 06
sebastiano.leggio@pewatron.com

E-Components

Current Sensors
Man Machine Interface
Measurement Probes

Sebastiano Leggio
Phone + 41 44 877 35 06
sebastiano.leggio@pewatron.com

PEWATRON AG
Thurgauerstrasse 66
CH-8052 Zurich

Phone + 41 44 877 35 00
Fax + 41 44 877 35 25

www.pewatron.com
info@pewatron.com