MEAN WELL

60W Triple Output Medical Type

RPT-60 series

■ Features :

- 4"x2" miniature size
- Universal AC input / Full range
- Low leakage current<200uA
- Protections: Short circuit / Overload / Over voltage
- Cooling by free air convection
- UL60601-1/IEC60601-1/EN60601-1 medical safety approved
- UL60950-1/IEC60950-1/EN60950-1 ITE safety approved
- Fixed switch frequency at 100KHz
- 3 years warranty

SPECIFICATION

MODEL		RPT-60A			RPT-60B			RPT-60C		
OUTPUT	OUTPUT NUMBER	CH1	CH2	CH3	CH1	CH2	CH3	CH1	CH2	CH3
	DC VOLTAGE	5V	12V	-5V	5V	12V	-12V	5V	15V	-15V
	RATED CURRENT	4A	2A	0.5A	4A	2A	0.5A	4A	1.5A	0.5A
	CURRENT RANGE	0.5 ~ 4.4A	0.1 ~ 2.2A	0.1 ~ 0.55A	0.5 ~ 4.4A	0.1 ~ 2.2A	0.1 ~ 0.55A	0.5 ~ 4.4A	0.1 ~ 1.65A	0.1 ~ 0.55A
	RATED POWER	46.5W			50W			50W		
	PEAK LOAD(10sec.) Note.4	51.15W			55W			55W		
	RIPPLE & NOISE (max.) Note.2	80mVp-p	80mVp-p	80mVp-p	80mVp-p	80mVp-p	100mVp-p	80mVp-p	100mVp-p	150mVp-p
	VOLTAGE TOLERANCE Note.3	+3,-2%	±6.0%	+9,-8%	+3,-2%	±6.0%	+6,-10%	+3,-2%	±6.0%	±8.0%
	LINE REGULATION	±0.5%	±1.0%	±1.0%	±0.5%	±1.0%	±2.0%	±0.5%	±2.0%	±2.0%
	LOAD REGULATION	±1.5%	±2.0%	+5,-7%	±1.5%	±2.0%	±5.0%	±1.5%	±3.0%	±4.0%
	SETUP, RISE TIME	200ms, 15ms/230VAC 200ms, 15ms/115VAC at full load								
	HOLD UP TIME (Typ.)	70ms/230VAC 15ms/115VAC at full load								
INPUT	VOLTAGE RANGE	90 ~ 264VAC 127 ~ 370VDC								
	FREQUENCY RANGE	47 ~ 63Hz								
	EFFICIENCY (Typ.)	77%			78%			79%		
	AC CURRENT (Typ.)	1.1A/115VAC 0.7A/230VAC								
	INRUSH CURRENT (Typ.)	COLD START 60A/230VAC 30A/115VAC								
	LEAKAGE CURRENT	For earth <200uA/264VAC, For patient <100uA/264VAC								
PROTECTION	OVERLOAD	115 ~ 150% rated output power								
		Protection type : Hiccup mode, recovers automatically after fault condition is removed								
	OVER VOLTAGE	CH1: 5.75 ~ 6.75V								
		Protection type : Shut down o/p voltage, re-power on to recover								
ENVIRONMENT	WORKING TEMP.	-20 ~ +65℃ (Refer to output load derating curve)								
	WORKING HUMIDITY	20 ~ 90% RH non-condensing								
	STORAGE TEMP., HUMIDITY	-40 ~ +85℃, 10 ~ 95% RH								
	TEMP. COEFFICIENT	±0.03%/℃ (0 ~ 45℃)								
	VIBRATION	10 ~ 500Hz, 2G 10min./1cycle, period for 60min. each along X, Y, Z axes								
SAFETY & EMC (Note 5)	SAFETY STANDARDS	UL60950-1, TUV EN60950-1, UL60601-1, TUV EN60601-1, IEC60601-1 approved								
	WITHSTAND VOLTAGE	I/P-O/P:4KVAC I/P-FG:1.5KVAC O/P-FG:1.5KVAC								
	ISOLATION RESISTANCE	I/P-O/P, I/P-FG, O/P-FG:100M Ohms/500VDC								
	EMI CONDUCTION & RADIATION	Compliance to EN55011(CISPR11),EN55022 (CISPR22) Class B								
	HARMONIC CURRENT	Compliance to EN61000-3-2,-3								
	EMS IMMUNITY	Compliance to EN61000-4-2,3,4,5,6,8,11; ENV50204, EN55024, EN60601-1-2, EN61204-3, medical level, criteria A								
OTHERS	MTBF	677.8Khrs min. MIL-HDBK-217F (25℃)								
	DIMENSION	101.6*50.8*29mm (L*W*H)								
	PACKING	0.15Kg; 96pcs/15.4Kg/0.89CUFT								

NOTE

1. All parameters NOT specially mentioned are measured at 230VAC input, rated load and 25℃ of ambient temperature.
2. Ripple & noise are measured at 20MHz of bandwidth by using a 12" twisted pair-wire terminated with a 0.1uf & 47uf parallel capacitor.
3. Tolerance : includes set up tolerance, line regulation and load regulation.
4. 33% Duty cycle maximum within every 30 seconds. Average output power should not exceed the rated power.
5. The power supply is considered a component which will be installed into a final equipment. The final equipment must be re-confirmed that it still meets EMC directives.
6. Length of set up time is measured at cold first start. Turning ON/OFF the power supply may lead to increase of the set up time.

Supporting your great ideas www.pewatron.com PEWATRON a member of the Angst + Pfister Group

MEAN WELL

60W Triple Output Medical Type

RPT-60 series

■ Features :

- 4"x2" miniature size
- Universal AC input / Full range
- Low leakage current<200uA
- Protections: Short circuit / Overload / Over voltage
- Cooling by free air convection
- UL60601-1/IEC60601-1/EN60601-1 medical safety approved
- UL60950-1/IEC60950-1/EN60950-1 ITE safety approved
- Fixed switch frequency at 100KHz
- 3 years warranty

SPECIFICATION

MODEL		RPT-60D			RPT-6003		
OUTPUT	OUTPUT NUMBER	CH1	CH2	CH3	CH1	CH2	CH3
	DC VOLTAGE	5V	24V	12V	3.3V	5V	12V
	RATED CURRENT	3.5A	1A	0.5A	5A	3A	0.7A
	CURRENT RANGE	0.5 ~ 3.85A	0.1 ~ 1.1A	0.1 ~ 0.55A	0.5 ~ 5.5A	0.3 ~ 3.3A	0.1 ~ 0.77A
	RATED POWER	47.5W			39.9W		
	PEAK LOAD(10sec.) Note.4	52.25W			43.9W		
	RIPPLE & NOISE (max.) Note.2	80mVp-p	150mVp-p	80mVp-p	80mVp-p	80mVp-p	80mVp-p
	VOLTAGE TOLERANCE Note.3	+3,-2%	±6.0%	±8.0%	+3,-2%	±8.0%	+6,-10%
	LINE REGULATION	±0.5%	±2.0%	±2.0%	±0.5%	±1.0%	±2.0%
	LOAD REGULATION	±1.5%	±3.0%	±4.0%	±1.5%	±2.0%	+5.5,-5%
	SETUP, RISE TIME	200ms, 15ms/230VAC 200ms, 15ms/115VAC at full load					
	HOLD UP TIME (Typ.)	70ms/230VAC 15ms/115VAC at full load					
INPUT	VOLTAGE RANGE	90 ~ 264VAC 127 ~ 370VDC					
	FREQUENCY RANGE	47 ~ 63Hz					
	EFFICIENCY (Typ.)	79%			75%		
	AC CURRENT (Typ.)	1.1A/115VAC 0.7A/230VAC					
	INRUSH CURRENT (Typ.)	COLD START 60A/230VAC 30A/115VAC					
	LEAKAGE CURRENT	For earth <200uA/264VAC, For patient <100uA/264VAC					
PROTECTION	OVERLOAD	115 ~ 150% rated output power					
		Protection type : Hiccup mode, recovers automatically after fault condition is removed					
	OVER VOLTAGE	CH1: 5.75 ~ 6.75V			CH1: 3.8 ~ 4.45V		
		Protection type : Shut down o/p voltage, re-power on to recover					
ENVIRONMENT	WORKING TEMP.	-20 ~ +65℃ (Refer to output load derating curve)					
	WORKING HUMIDITY	20 ~ 90% RH non-condensing					
	STORAGE TEMP., HUMIDITY	-40 ~ +85℃, 10 ~ 95% RH					
	TEMP. COEFFICIENT	±0.03%/℃ (0 ~ 45℃)					
	VIBRATION	10 ~ 500Hz, 2G 10min./1cycle, period for 60min. each along X, Y, Z axes					
SAFETY & EMC (Note 5)	SAFETY STANDARDS	UL60950-1, TUV EN60950-1, UL60601-1, TUV EN60601-1, IEC60601-1 approved					
	WITHSTAND VOLTAGE	I/P-O/P:4KVAC I/P-FG:1.5KVAC O/P-FG:1.5KVAC					
	ISOLATION RESISTANCE	I/P-O/P, I/P-FG, O/P-FG:100M Ohms/500VDC					
	EMI CONDUCTION & RADIATION	Compliance to EN55011(CISPR11),EN55022 (CISPR22) Class B					
	HARMONIC CURRENT	Compliance to EN61000-3-2,-3					
	EMS IMMUNITY	Compliance to EN61000-4-2,3,4,5,6,8,11; ENV50204, EN55024, EN60601-1-2, EN61204-3, medical level, criteria A					
OTHERS	MTBF	677.8Khrs min. MIL-HDBK-217F (25℃)					
	DIMENSION	101.6*50.8*29mm (L*W*H)					
	PACKING	0.15Kg; 96pcs/15.4Kg/0.89CUFT					
NOTE	1. All parameters NOT specially mentioned are measured at 230VAC input, rated load and 25℃ of ambient temperature. 2. Ripple & noise are measured at 20MHz of bandwidth by using a 12" twisted pair-wire terminated with a 0.1uf & 47uf parallel capacitor. 3. Tolerance : includes set up tolerance, line regulation and load regulation. 4. 33% Duty cycle maximum within every 30 seconds. Average output power should not exceed the rated power. 5. The power supply is considered a component which will be installed into a final equipment. The final equipment must be re-confirmed that it still meets EMC directives. 6. Length of set up time is measured at cold first start. Turning ON/OFF the power supply may lead to increase of the set up time.						

File Name:RPT-60-SPEC 2008-03-25

MEAN WELL

60W Triple Output Medical Type

RPT-60 series

■ Mechanical Specification

Unit:mm

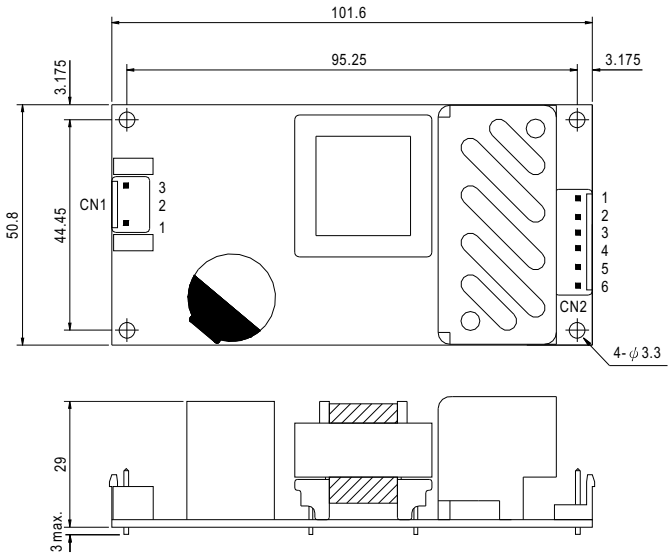

AC Input Connector (CN1) : JST B3P-VH or equivalent

Pin No.	Assignment	Mating Housing	Terminal
1	AC/N	JST VHR or equivalent	JST SVH-21T-P1.1 or equivalent
2	No Pin		
3	AC/L		

DC Output Connector (CN2) : JST B6P-VH or equivalent

Pin No.	Assignment	Mating Housing	Terminal
1,2	V1	JST VHR or equivalent	JST SVH-21T-P1.1 or equivalent
3,4	COM		
5	V2		
6	V3		

■ Block Diagram

fosc : 100KHz

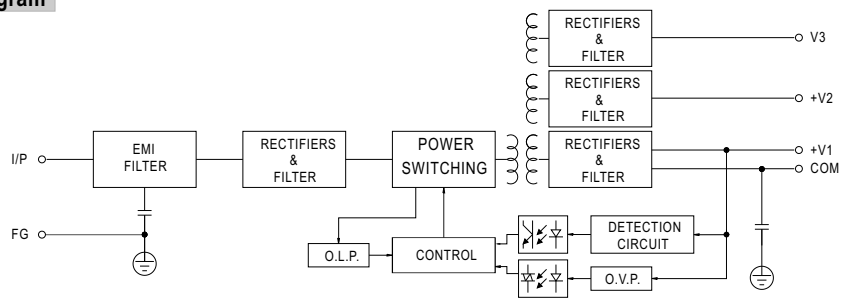

■ Derating Curve

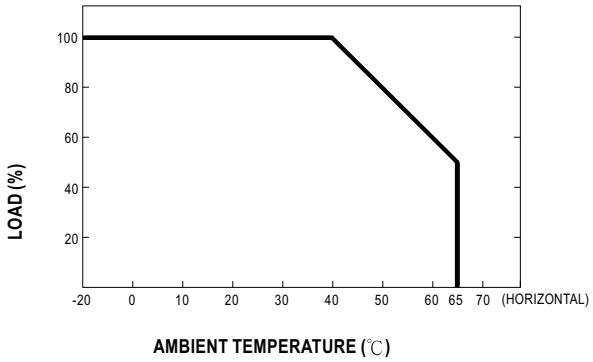

■ Output Derating VS Input Voltage

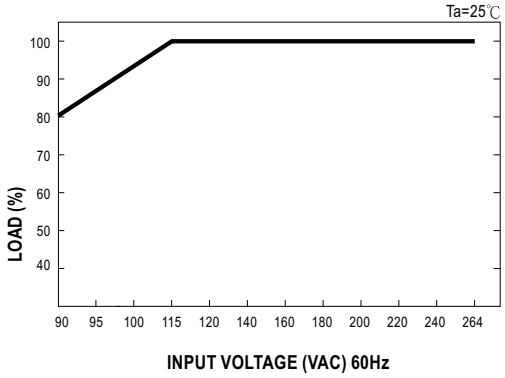

File Name:RPT-60-SPEC 2008-03-25

PEWATRON
a member of the Angst + Pfister Group

We are here for you. Addresses and Contacts

Sales Switzerland

Postcode 3000 – 9999
Liechtenstein

Matthias Rüegg
Ruhbergstrasse 32
CH-9230 Flawil

Phone + 41 44 877 35 18
Mobile + 41 76 491 66 66
Fax + 41 44 877 35 19

matthias.rueegg@pewatron.com

Postcode 1000 – 2999

Raffael Favaretto
Route d'Oron 124
CH-1673 Promasens

Phone + 41 44 877 35 22
Mobile + 41 76 444 63 14
Fax + 41 44 877 35 23

raffael.favaretto@pewatron.com

Sales Germany

Postcode 60000 – 79999

Dieter Hirthe
Mühlweg 23
D-71554 Weissach i.T.

Phone + 49 719 149 60 58
Mobile + 49 163 762 74 30
Fax + 49 719 193 31 88

dieter.hirthe@pewatron.com

Postcode 10000 – 59999
Postcode 80000 – 99999

Kurt Stritzelberger
Neumarkter Str. 86a
D-81673 Munich

Phone + 49 89 260 38 47
Mobile + 49 171 803 41 35
Fax + 49 89 43 10 91 91

kurt.stritzelberger@pewatron.com

Key Accounts
Aerospace and Defence

Claus Wübbena
Vogelkamp 26
D-26655 Westerstede

Phone + 49 4488 5204 614
Mobile + 49 173 9700 691
Fax + 49 4488 5204 616

claus.wuebbena@pewatron.com

Sales Austria

Kurt Stritzelberger
Neumarkter Str. 86a
D-81673 Munich

Phone + 49 89 260 38 47
Mobile + 49 17 18 03 41 35
Fax + 49 89 43 10 91 91

kurt.stritzelberger@pewatron.com

Sales Other Countries / Product Management

Sensors

Physical Sensors
Data Acquisition

Peter Felder
Phone + 41 44 877 35 05
peter.felder@pewatron.com

Geometrical Sensors

Eric Letsch
Phone + 41 44 877 35 14
eric.letsch@pewatron.com

Power Supplies

DC-DC Converters
Switching Power Supplies
DC-AC Inverters

Sebastiano Leggio
Phone + 41 44 877 35 06
sebastiano.leggio@pewatron.com

E-Components

Current Sensors
Man Machine Interface
Measurement Probes

Sebastiano Leggio
Phone + 41 44 877 35 06
sebastiano.leggio@pewatron.com

PEWATRON AG
Thurgauerstrasse 66
CH-8052 Zurich

Phone + 41 44 877 35 00
Fax + 41 44 877 35 25

www.pewatron.com
info@pewatron.com