PROTEK POWER

150-200 WATT MEDICAL SWITCHING POWER SUPPLIES

DESCRIPTION

The PM201 series comprising single and multiple output models for 150 to 200 watts of continuous output power is specially designed for medical and ITE applications, not for life-support. They operate at 90 to 264 VAC input voltage without the need of a selector strap. All auxiliary outputs are with magnetic amplifier linear regulator to keep regulation. The units are constructed on a printed circuit board with a U-bracket for mechanical support and heat sinking. A cover-and-fan assembly can be added during manufacturing.

FEATURES

- Low safety ground leakage current
- Meet EN 55011 and FCC Class B
- Power Factor 0.98 typical
- Short-circuit protection
- Power Fail Detect (PFD) signal
- 100% burn-in at full rated load
- Optional cover-and-fan assembly
- Remote inhibit-TTL high disables output
- Compliant with RoHS requirements

INPUT SPECIFICATIONS

Input voltage：	90-264 VAC
Input frequency：	47-63 Hz
Input current：	3.20 A (rms) for 115 VAC 1.60 A (rms) for 230 VAC
Earth leakage current：	90 uA max. @ 115 VAC, 60 Hz 150 uA max. @ 230 VAC, 50 Hz

OUTPUT SPECIFICATIONS

Output voltage/current：	See rating chart
Total output power：	200 watts maximum
Ripple and noise：	2% peak to peak maximum
Overvoltage protection：	Provided on output #1 only; set at 112-132% of its nominal output voltage
Overcurrent protection：	All outputs protected to short circuit conditions
Temperature coefficient：	All outputs ±0.04% /℃ maximum
Transient response：	Maximum excursion of 4% or better on all models, recovering to 1% of final value within 500 us after a 25% step load change
PFD signal：	TTL logic high for normal operation and TTL logic low upon loss of input power. This signal appears at least 1ms prior to +5 V output dropping 5% below its nominal value. This signal also provides a minimum delay of 100 ms after +5 V is within regulation.

ENVIRONMENTAL SPECIFICATIONS

Operating temperature:	0℃ to +70℃
Storage temperature:	-40℃ to +85℃
Relative humidity:	5% to 95% non-condensing
Derating:	Derate from 100% at +50℃
Cooling:	linearly to 50% at +70℃ 10.8 CFM forced air provided on “C” version; 25 CFM forced air to be provided for “B” version by user.

PM201 SERIES

CE (LVD)
RoHS

SAFETY STANDARD APPROVALS

c UL us	UL 60601-1, CSA C22.2 No. 601.1 File No. E178020 UL 60950-1 File No. E137410
IEC 60601-1	TÜV EN60601-1
TÜV Rheinland Product Safety / BAUART GEPRÜFT TYPE APPROVED	TÜV EN60950-1

GENERAL SPECIFICATIONS

Switching frequency：	88-112 KHz
Efficiency：	70% minimum on all models
Hold-up time：	20 msec minimum at 110 VAC
Line regulation：	±0.5% maximum at full load
Inrush current：	20 A @ 115 VAC or 40 A @ 230 VAC, at 25℃ cold start
Withstand voltage：	4000 VAC from input to output 1500 VAC from input to ground 500 VAC from output to ground
MTBF：	350,000 hours at full load at 25℃ ambient , calculated per MIL-HDBK-217F

EMC Performance (EN60601-1-2: 2001)

EN55011/EN55022:	Class B conducted, class B radiated
EN61000-3-2:	Harmonic distortion, class A and D
EN61000-3-3:	Line flicker
EN61000-4-2:	ESD, ±8 KV air and ±6 KV contact
EN61000-4-3:	Radiated immunity, 3 V/m
EN61000-4-4:	Fast transient/burst, ±2 KV
EN61000-4-5:	Surge, ±1 KV diff., ±2 KV com.
EN61000-4-6:	Conducted immunity, 3 Vrms
EN61000-4-8:	Magnetic field immunity, 3 A/m
EN61000-4-11:	Voltage dips, 30% reduction for 500 ms, 60% reduction for 100 ms and >95% reduction for 10 ms

Supporting your great ideas www.pewatron.com PEWATRON a member of the Angst + Pfister Group

UNIVERSAL INPUT PM201 MEDICAL SERIES

OUTPUT VOLTAGE/CURRENT RATING CHART

	Output #1				Output #2				Output #3				Output #4				Maximum Output
MODEL	Vnom.	Imin.	Imax.	Tol.	Vnom.	Imin.	Imax.	Tol.	Vnom.	Imin.	Imax.	Tol.	Vnom.	Imin.	Imax.	Tol.	Power
PM201-10	5.1 V	3.0 A	35 A	2%		(N/A)				(N/A)				(N/A)			175 W
PM201-10-3	3.3 V	3.0 A	46 A	3%		(N/A)				(N/A)				(N/A)			150 W
PM201-12	12 V	1.2 A	16.7 A	2%		(N/A)				(N/A)				(N/A)			200 W
PM201-13	15 V	1.0 A	13.4 A	2%		(N/A)				(N/A)				(N/A)			200 W
PM201-14	24 V	0.6 A	8.4 A	2%		(N/A)				(N/A)				(N/A)			200 W
PM201-16	30 V	0.5 A	6.7 A	2%		(N/A)				(N/A)				(N/A)			200 W
PM201-18	48 V	0.5 A	4.2 A	2%		(N/A)				(N/A)				(N/A)			200 W
PM201-23	+5.1 V	3.0 A	30 A	2%	+12 V	0 A	8 A	4%		(N/A)				(N/A)			200 W
PM201-24	+5.1 V	3.0 A	30 A	2%	+15 V	0 A	6 A	4%		(N/A)				(N/A)			200 W
PM201-25	+5.1 V	3.0 A	30 A	2%	+24 V	0 A	4 A	4%		(N/A)				(N/A)			200 W
PM201-27	+12 V	1.0 A	8.7 A	2%	+24 V	0 A	4 A	4%		(N/A)				(N/A)			200 W
PM201-30	+5.1 V	3.0 A	30 A	2%	+12 V	0 A	8 A	4%	-5 V	0 A	6 A	4%		(N/A)			200 W
PM201-31	+5.1 V	3.0 A	30 A	2%	+12 V	0 A	8 A	4%	-12 V	0 A	4 A	4%		(N/A)			200 W
PM201-32	+5.1 V	3.0 A	30 A	2%	+15 V	0 A	6 A	4%	-15 V	0 A	4 A	4%		(N/A)			200 W
PM201-33	+5.1 V	3.0 A	30 A	2%	+15 V	0 A	6 A	4%	-12 V	0 A	4 A	4%		(N/A)			200 W
PM201-36	+5.1 V	3.0 A	30 A	2%	+12 V	0 A	8 A	4%	24 V	0 A	4 A	4%		(N/A)			200 W
PM201-40	+5.1 V	3.0 A	30 A	2%	+12 V	0 A	8 A	4%	-12 V	0 A	4 A	4%	5 V	0 A	6 A	4%	200 W
PM201-41	+5.1 V	3.0 A	30 A	2%	+15 V	0 A	6 A	4%	-15 V	0 A	4 A	4%	24 V	0 A	4 A	4%	200 W
PM201-42	+5.1 V	3.0 A	30 A	2%	+12 V	0 A	8 A	4%	-12 V	0 A	4 A	4%	12 V	0 A	4 A	4%	200 W
PM201-44	+5.1 V	3.0 A	30 A	2%	+12 V	0 A	8 A	4%	-15 V	0 A	4 A	4%	15 V	0 A	4 A	4%	200 W
PM201-45	+5.1 V	3.0 A	30 A	2%	+12 V	0 A	8 A	4%	-12 V	0 A	4 A	4%	24 V	0 A	4 A	4%	200 W
PM201-40-3	+3.3 V	3.0 A	30 A	3%	+5.1 V	0 A	8 A	4%	-12 V	0 A	4 A	4%	12 V	0 A	4 A	4%	175 W

NOTES:
1. Add suffix “B” for U-bracket format and “C” for enclosed format with option fan control, e.g. PM201-45C.
2. Peak current is 12 A on +12 V, 9 A on +15 V and 6 A on +24 V.
3. Output #4 is floating. It can be connected externally for positive or negative output.
4. 200 watts for “C” version with a cover-and-fan assembly. 100 watts for “B” version without moving air (maximum current of output #1 & #2 derated to 50%), or 200 watts with 25 CFM forced air provided by user.
5. When the remote Sense facility is not used, +Sense must be connected to +V, and –Sense to return, on P2 connector.
6. All models may be operated at no-load. At no-load, output voltage tolerance increases to 10%.

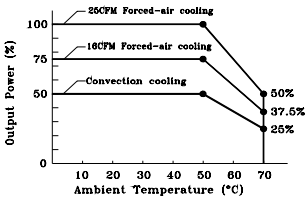

MECHANICAL SPECIFICATIONS

Single Output Models

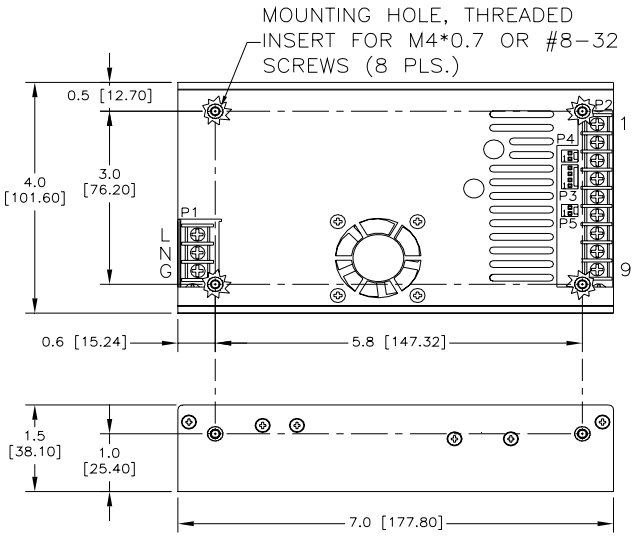

NOTES:
1. Dimensions shown in inches [mm]
2. Tolerance 0.02 [0.5] maximum
3. Input connector P1 is Dinkle DT-35-B01W-03. Output connector P2 is Dinkle DT-35-B01W-09. Screws are M3, nickel plated.
4. Connector P3 mates with Molex housing 22-01-1043 and Molex 40445 series crimp terminal.
5. Connectors P4, P5 mates with Molex housing 22-01-1023 and Molex 40445 series crimp terminal.
6. P4 is for DC fan rated 12 V/0.2 A, Pin1 +V and Pin2 COM.
7. Weight:
   820 grams (1.83 lbs.) approx. for “B” version,
   960 grams (2.14 lbs.) approx. for “C” version

Supporting your great ideas www.pewatron.com PEWATRON a member of the Angst + Pfister Group

UNIVERSAL INPUT PM201 MEDICAL SERIES

Multiple Output Models

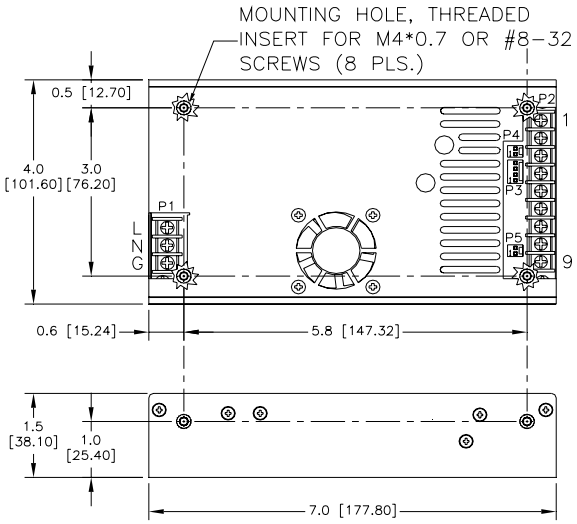

NOTES:

1. Dimensions shown in inches [mm]
2. Tolerance 0.02 [0.5] maximum
3. Input connector P1 is Dinkle DT-35-B01W-03. Output connector P2 is Dinkle DT-35-B01W-09. Screws are M3, nickel plated.
4. Connector P3 mates with Molex housing 22-01-1043 and Molex 40445 series crimp terminal.
5. Connectors P4, P5 mates with Molex housing 22-01-1023 and Molex 40445 series crimp terminal.
6. P4 is for DC fan rated 24V/0.2A (models PM201-25/27) or 5V/0.38A (models PM201-40-3), and 12V/0.2A (other models, Pin1 +V and Pin2 COM).
7. Weight:
   820 grams (1.83 lbs.) approx. for “B” version,
   960 grams (2.14 lbs.) approx. for “C” version

PIN CHART

CONN / PIN / MODEL	P2									P3				P5	
	1	2	3	4	5	6	7	8	9	1	2	3	4	1	2
PM201-10 PM201-10-3 PM201-12 PM201-13 PM201-14 PM201-16 PM201-18	-SENSE	RET.	RET.	RET.	RET.	OUTPUT #1	OUTPUT #1	OUTPUT #1	+SENSE	FAN	COM. RET.	COM. RET.	PFD	INHIBIT+	INHIBIT-
PM201-23 PM201-24 PM201-25 PM201-27	OUTPUT #1	OUTPUT #1	COM. RET.	COM. RET.	COM. RET.	OUTPUT #2	N.C.	N.C.	N.C.	FAN	COM. RET.	COM. RET.	PFD	INHIBIT+	INHIBIT-
PM201-30 PM201-31 PM201-32 PM201-33	OUTPUT #1	OUTPUT #1	COM. RET.	COM. RET.	COM. RET.	OUTPUT #2	OUTPUT #3	N.C.	N.C.	FAN	COM. RET.	COM. RET.	PFD	INHIBIT+	INHIBIT-
PM201-36	OUTPUT #1	OUTPUT #1	COM. RET.	COM. RET.	COM. RET.	OUTPUT #2	N.C.	OUTPUT #3 RETURN	OUTPUT #3	FAN	COM. RET.	COM. RET.	PFD	INHIBIT+	INHIBIT-
PM201-40 PM201-40-3 PM201-41 PM201-42 PM201-44 PM201-45	OUTPUT #1	OUTPUT #1	COM. RET.	COM. RET.	COM. RET.	OUTPUT #2	OUTPUT #3	OUTPUT #4 RETURN	OUTPUT #4	FAN	COM. RET.	COM. RET.	PFD	INHIBIT+	INHIBIT-

Supporting your great ideas www.pewatron.com PEWATRON a member of the Angst + Pfister Group

PEWATRON
a member of the Angst + Pfister Group

We are here for you. Addresses and Contacts

Sales Switzerland

Postcode 3000 – 9999
Liechtenstein

Matthias Rüegg
Ruhbergstrasse 32
CH-9230 Flawil

Phone + 41 44 877 35 18
Mobile + 41 76 491 66 66
Fax + 41 44 877 35 19

matthias.rueegg@pewatron.com

Postcode 1000 – 2999

Raffael Favaretto
Route d'Oron 124
CH-1673 Promasens

Phone + 41 44 877 35 22
Mobile + 41 76 444 63 14
Fax + 41 44 877 35 23

raffael.favaretto@pewatron.com

Sales Germany

Postcode 60000 – 79999

Dieter Hirthe
Mühlweg 23
D-71554 Weissach i.T.

Phone + 49 719 149 60 58
Mobile + 49 163 762 74 30
Fax + 49 719 193 31 88

dieter.hirthe@pewatron.com

Postcode 10000 – 59999
Postcode 80000 – 99999

Kurt Stritzelberger
Neumarkter Str. 86a
D-81673 Munich

Phone + 49 89 260 38 47
Mobile + 49 171 803 41 35
Fax + 49 89 43 10 91 91

kurt.stritzelberger@pewatron.com

Key Accounts
Aerospace and Defence

Claus Wübbena
Vogelkamp 26
D-26655 Westerstede

Phone + 49 4488 5204 614
Mobile + 49 173 9700 691
Fax + 49 4488 5204 616

claus.wuebbena@pewatron.com

Sales Austria

Kurt Stritzelberger
Neumarkter Str. 86a
D-81673 Munich

Phone + 49 89 260 38 47
Mobile + 49 17 18 03 41 35
Fax + 49 89 43 10 91 91

kurt.stritzelberger@pewatron.com

Sales Other Countries / Product Management

Sensors

Physical Sensors
Data Acquisition

Peter Felder
Phone + 41 44 877 35 05
peter.felder@pewatron.com

Geometrical Sensors

Eric Letsch
Phone + 41 44 877 35 14
eric.letsch@pewatron.com

Power Supplies

DC-DC Converters
Switching Power Supplies
DC-AC Inverters

Sebastiano Leggio
Phone + 41 44 877 35 06
sebastiano.leggio@pewatron.com

E-Components

Current Sensors
Man Machine Interface
Measurement Probes

Sebastiano Leggio
Phone + 41 44 877 35 06
sebastiano.leggio@pewatron.com

PEWATRON AG
Thurgauerstrasse 66
CH-8052 Zurich

Phone + 41 44 877 35 00
Fax + 41 44 877 35 25

www.pewatron.com
info@pewatron.com