PROTEK POWER

450-480 WATT ITE POWER SUPPLIES

DESCRIPTION

The PU450 series comprising single and multiple output models for 450-480 watts of continuous output power is specially designed for ITE and industrial applications. They operate at 90-264 VAC input voltage without the need of a selector strap. The units are constructed on a printed circuit board with a U-bracket for mechanical support and heat sinking. A cover-and-fan assembly can be added during manufacturing.

PU450 SERIES

CE (LVD)

RoHS

FEATURES

- EN61000-3-2 class A and D compliant
- Power Factor 0.98 typical
- Overvoltage protection
- Short-circuit protection
- Thermal protection
- Power Fail Detect (PFD) Signal
- 100% burn-in at full rated load
- Remote sense on output #1 and output #2
- Remote inhibit – TTL high to disable output
- Compliant with RoHS requirements

SAFETY STANDARD APPROVALS

UL 60950-1, CSA C22.2 No. 60950-1

TÜV EN 60950-1

INPUT SPECIFICATIONS

Input voltage:	90-264 VAC
Input frequency:	47-63 Hz
Input current:	7.1 A（rms）for 115 VAC 3.5 A（rms）for 230 VAC
Earth leakage current:	240 μA max.@ 264 VAC, 63 Hz

OUTPUT SPECIFICATIONS

Output voltage/current:	See rating chart.
Maximum output power:	See rating chart.
Ripple and noise:	1% peak to peak maximum
Overvoltage protection:	Provided on output #1 only; set at 115-140% of its nominal output voltage
Overcurrent protection:	All outputs protected to short circuit conditions
Temperature coefficient:	All outputs ±0.04%/℃ maximum
Transient response:	Maximum excursion of 4% or better on all models, recovering to 1% of final value within 500us after a 25% step load change
Fan power:	12 V at 400 mA for B version, 12 V at 100 mA for C version

INTERFACE SIGNALS

PFD:	TTL logic high for normal operation and TTL logic low upon loss of input power. This signal appears at least 1ms prior to master output dropping 5% below its nominal value. This signal also provides a minimum delay of 100 ms after master output is within regulation.
Inhibit：	Requires an external TTL high level signal to inhibit outputs for standard models.

ENVIRONMENTAL SPECIFICATIONS

Operating temperature:	0□ to +70□
Storage temperature:	-40□ to +85□
Relative humidity:	5% to 95% non-condensing
Derating:	Derate from 100% at +50□ linearly to 50% at +70□

GENERAL SPECIFICATIONS

Switching frequency:	60 KHz ±10 KHz
Power factor:	0.98 typical
Efficiency:	80% minimum on all models
Hold-up time:	12 ms minimum at 110 VAC
Line regulation:	±0.2% maximum at full load
Inrush current:	40 A @ 115 VAC or 80 A @ 230 VAC, at 25□ cold start
Withstand voltage:	3000 VAC from input to output, 1500 VAC from input to ground, 500 VAC from output to ground
MTBF:	300,000 hours at full load at 25□ ambient, calculated per MIL-HDBK-217F
EMC Performance	
EN55022:	Class B conducted, Class A radiated
FCC:	Class B conducted, Class A radiated
VCCI:	Class B conducted, Class A radiated
EN61000-3-2:	Harmonic distortion, Class A and D
EN61000-3-3:	Line flicker
EN61000-4-2:	ESD, ±8 KV air and ±4 KV contact
EN61000-4-3:	Radiated immunity, 3V/m
EN61000-4-4:	Fast transient/burst, ±1 KV
EN61000-4-5:	Surge, ±1 KV diff., ±2 KV com
EN61000-4-6:	Conducted immunity, 3 V/ms
EN61000-4-8:	Magnetic field immunity, 1 A/m
EN61000-4-11:	Voltage dip immunity, 30% reduction for 500 ms and >95% reduction for 10 ms

Supporting your great ideas www.pewatron.com PEWATRON a member of the Angst + Pfister Group

UNIVERSAL INPUT PU450 ITE SERIES

OUTPUT VOLTAGE/CURRENT RATING CHART

Model[1]	Output #1[3][5]				Output #2[5]				Output #3[4]				Max. Output Power[5]
	V1	Imin.	Imax.	Tol.	V2	Imin.	Imax.	Tol.	V3	Imin.	Imax.	Tol.	
PU450-12B	12 V	0 A	37.5 A	±2%	(N/A)				(N/A)				225 / 450 W
PU450-13B	15 V	0 A	30.0 A	±2%	(N/A)				(N/A)				225 / 450 W
PU450-14B	24 V	0 A	18.75 A	±2%	(N/A)				(N/A)				225 / 450 W
PU450-15B	27 V	0 A	16.7 A	±2%	(N/A)				(N/A)				225 / 450 W
PU450-16B	30 V	0 A	15.0 A	±2%	(N/A)				(N/A)				225 / 450 W
PU450-17-1B	40 V	0 A	12.0 A	±2%	(N/A)				(N/A)				240 / 480 W
PU450-18B	48 V	0 A	10.0 A	±2%	(N/A)				(N/A)				240 / 480 W
PU450-19B	55 V	0 A	8.73 A	±2%	(N/A)				(N/A)				240 / 480 W
PU450-20B	24 V	1.0 A	12.0 A	±2%	12 V	1.00 A	17 A	±5%	(N/A)				225 / 450 W
PU450-21B	24 V	1.0 A	12.0 A	±2%	15 V	0.75 A	15 A	±5%	(N/A)				225 / 450 W
PU450-22B	48 V	0.5 A	6.0 A	±2%	24 V	0.50 A	10 A	±5%	(N/A)				225 / 450 W
PU450-23B	48 V	0.5 A	6.0 A	±2%	12 V	1.00 A	17 A	±5%	(N/A)				225 / 450 W
PU450-24B	48 V	0.5 A	6.0 A	±2%	15 V	0.75 A	15 A	±5%	(N/A)				225 / 450 W
PU450-30B	24 V	1.0 A	12.0 A	±2%	12 V	1.00 A	17 A	±5%	3.3 V	0 A	8 A	±3%	225 / 450 W
PU450-31B	24 V	1.0 A	12.0 A	±2%	15 V	0.75 A	15 A	±5%	3.3 V	0 A	8 A	±3%	225 / 450 W
PU450-32B	24 V	1.0 A	12.0 A	±2%	12 V	1.00 A	17 A	±5%	5.1 V	0 A	8 A	±3%	225 / 450 W
PU450-33B	24 V	1.0 A	12.0 A	±2%	15 V	0.75 A	15 A	±5%	5.1 V	0 A	8 A	±3%	225 / 450 W
PU450-34B	48 V	0.5 A	6.0 A	±2%	12 V	1.00 A	17 A	±5%	3.3 V	0 A	8 A	±3%	225 / 450 W
PU450-35B	48 V	0.5 A	6.0 A	±2%	15 V	0.75 A	15 A	±5%	3.3 V	0 A	8 A	±3%	225 / 450 W
PU450-36B	48 V	0.5 A	6.0 A	±2%	12 V	1.00 A	17 A	±5%	5.1 V	0 A	8 A	±3%	225 / 450 W
PU450-37B	48 V	0.5 A	6.0 A	±2%	15 V	0.75 A	15 A	±5%	5.1 V	0 A	8 A	±3%	225 / 450 W

NOTES:
1. Suffix "B" in model numbers denotes U-bracket form. Change "B" to "C" for enclosed form with cover-and-fan assembly, e.g. PU450-14C.
2. All outputs are floating. They can be connected externally for positive or negative output.
3. Output #1 can be adjusted within ±5% of its nominal voltage.
4. Output #3 can be adjusted within ±15% of its nominal voltage.
5. 450-480 watts for "C" version with cover-and-fan assembly. 225-240 watts for "B" version without moving air (maximum current of output #1 & 2 derated to 50%), or 450 watts with 40 CFM forced air provided by user.
6. All models may be operated at no-load. At no-load, output voltage tolerance increases to ±10%.

OUTPUT POWER DERATING CURVE

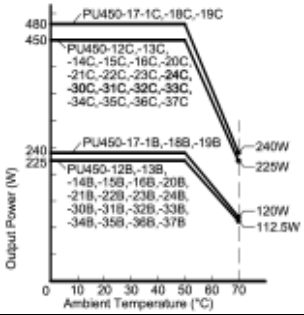

MECHANICAL SPECIFICATIONS

Single Output Models

U-bracket Form

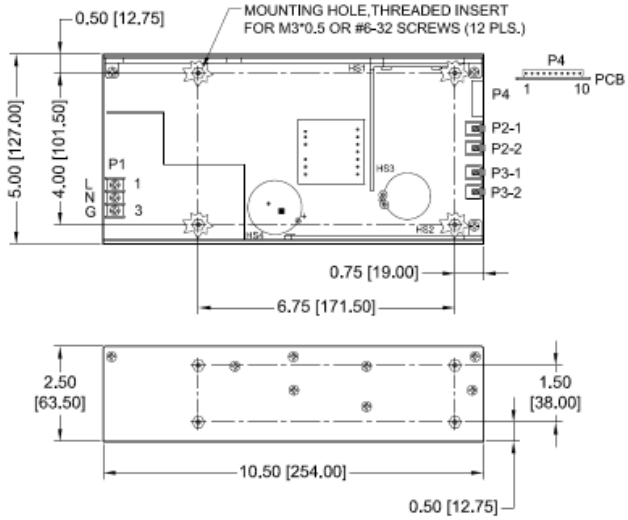

Enclosed Form

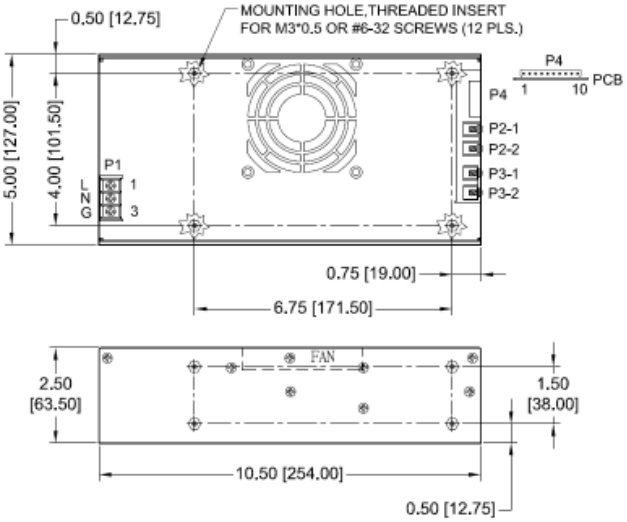

Supporting your great ideas www.pewatron.com PEWATRON a member of the Angst + Pfister Group

UNIVERSAL INPUT PU450 ITE SERIES

Multiple Output Models
U-bracket Form

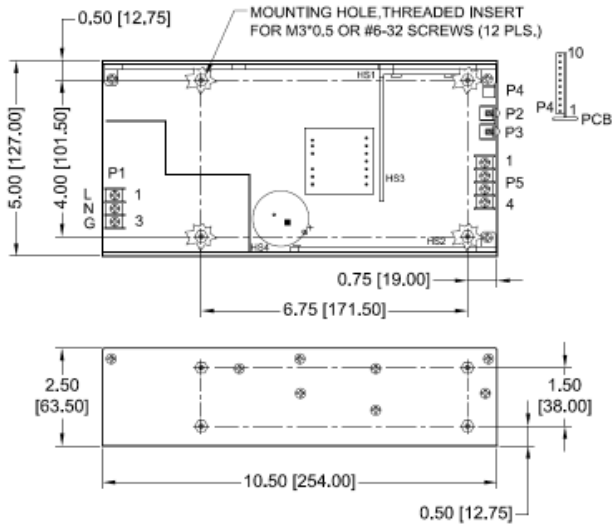

Enclosed Form

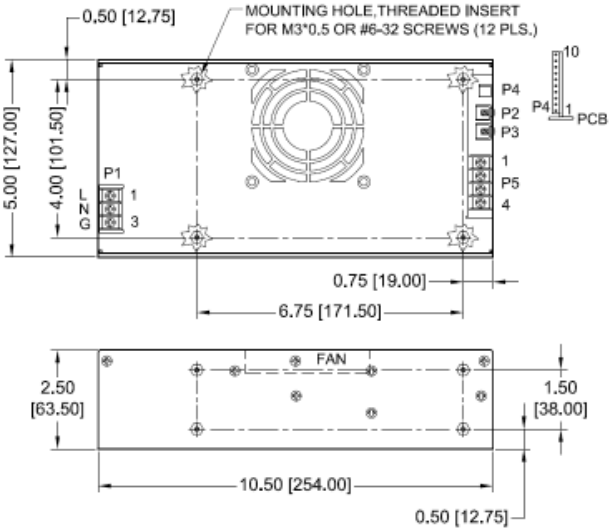

NOTES:
1. Dimensions shown in inches [mm]
2. Tolerance 0.02 [0.5] maximum
3. Input connector P1 is Dinkle DT-35-B01W-03 with M3, nickel plated screws.
4. Connector P4 mates with Molex housing 50-37-5103 and pins 5263.
5. P2, P2-1, P2-2, P3, P3-1 & P3-2: M3*0.5 screw connections
6. Output connector P5 is Dinkle DT-35-B01W-04 with M3, nickel plated screws.
7. Weight: 1.8 Kgs (3.96 lbs.) approx. for U-bracket form, 2.0 Kg (4.4 lbs.) approx. for enclosed form
8. Maximum penetration depth of fixing screws is 4 mm from the outer surface of chassis.

PIN CHART

MODEL / CONN / PIN		P1 (AC)			P2	P3	P5			
		1	2	3			1	2	3	4
PU450-12B PU450-13B PU450-14B PU450-15B	PU450-16B PU450-17-1B PU450-18B PU450-19B	Live	Neutral	Ground	+V1	V1 Return	N.A.			
PU450-20B PU450-21B PU450-22B	PU450-23B PU450-24B	Live	Neutral	Ground	+V1	V1 Return	+V2	V2 Return	N.C.	N.C.
PU450-30B PU450-31B PU450-32B PU450-33B	PU450-34B PU450-35B PU450-36B PU450-37B	Live	Neutral	Ground	+V1	V1 Return	+V2	V2 Return	+V3	V3 Return

MODEL / CONN / PIN		P4									
		1	2	3	4	5	6	7	8	9	10
PU450-12B PU450-13B PU450-14B PU450-15B	PU450-16B PU450-17-1B PU450-18B PU450-19B	PFD Return	+V1 Sense	-V1 Sense	PFD	Inhibit +V	Inhibit -V	N.C.	N.C.	Fan Return	+12V Fan
PU450-20B PU450-21B PU450-22B	PU450-23B PU450-24B	PFD Return	+V1 Sense	-V1 Sense	PFD	Inhibit +V	Inhibit -V	+V2 Sense	-V2 Sense	Fan Return	+12V Fan
PU450-30B PU450-31B PU450-32B PU450-33B	PU450-34B PU450-35B PU450-36B PU450-37B	PFD Return	+V1 Sense	-V1 Sense	PFD	Inhibit +V	Inhibit -V	+V2 Sense	-V2 Sense	Fan Return	+12V Fan

Supporting your great ideas www.pewatron.com PEWATRON a member of the Angst + Pfister Group

PEWATRON
a member of the Angst + Pfister Group

We are here for you. Addresses and Contacts

Sales Switzerland

Postcode 3000 – 9999
Liechtenstein

Matthias Rüegg
Ruhbergstrasse 32
CH-9230 Flawil

Phone + 41 44 877 35 18
Mobile + 41 76 491 66 66
Fax + 41 44 877 35 19

matthias.rueegg@pewatron.com

Postcode 1000 – 2999

Raffael Favaretto
Route d'Oron 124
CH-1673 Promasens

Phone + 41 44 877 35 22
Mobile + 41 76 444 63 14
Fax + 41 44 877 35 23

raffael.favaretto@pewatron.com

Sales Germany

Postcode 60000 – 79999

Dieter Hirthe
Mühlweg 23
D-71554 Weissach i.T.

Phone + 49 719 149 60 58
Mobile + 49 163 762 74 30
Fax + 49 719 193 31 88

dieter.hirthe@pewatron.com

Postcode 10000 – 59999
Postcode 80000 – 99999

Kurt Stritzelberger
Neumarkter Str. 86a
D-81673 Munich

Phone + 49 89 260 38 47
Mobile + 49 171 803 41 35
Fax + 49 89 43 10 91 91

kurt.stritzelberger@pewatron.com

Key Accounts
Aerospace and Defence

Claus Wübbena
Vogelkamp 26
D-26655 Westerstede

Phone + 49 4488 5204 614
Mobile + 49 173 9700 691
Fax + 49 4488 5204 616

claus.wuebbena@pewatron.com

Sales Austria

Kurt Stritzelberger
Neumarkter Str. 86a
D-81673 Munich

Phone + 49 89 260 38 47
Mobile + 49 17 18 03 41 35
Fax + 49 89 43 10 91 91

kurt.stritzelberger@pewatron.com

Sales Other Countries / Product Management

Sensors

Physical Sensors
Data Acquisition

Peter Felder
Phone + 41 44 877 35 05
peter.felder@pewatron.com

Geometrical Sensors

Eric Letsch
Phone + 41 44 877 35 14
eric.letsch@pewatron.com

Power Supplies

DC-DC Converters
Switching Power Supplies
DC-AC Inverters

Sebastiano Leggio
Phone + 41 44 877 35 06
sebastiano.leggio@pewatron.com

E-Components

Current Sensors
Man Machine Interface
Measurement Probes

Sebastiano Leggio
Phone + 41 44 877 35 06
sebastiano.leggio@pewatron.com

PEWATRON AG
Thurgauerstrasse 66
CH-8052 Zurich

Phone + 41 44 877 35 00
Fax + 41 44 877 35 25

www.pewatron.com
info@pewatron.com