MEAN WELL

50W Dual Output Switching Power Supply

# RID-50 series

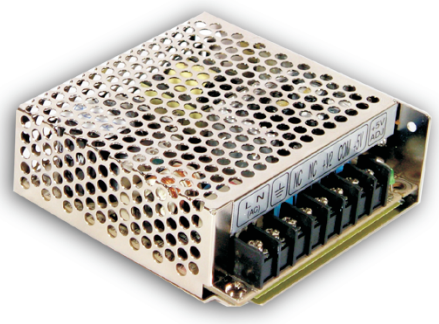

■ Features :

- Isolated output & GND for CH1,CH2
- Universal AC input / Full range
- Protections:Short circuit/Over load/Over voltage
- Cooling by free air convection
- LED indicator for power on
- 100% full load burn-in test
- All using 105℃ long life electrolytic capacitors
- Withstand 300VAC surge input for 5 second
- High operating temperature up to 70℃
- Withstand 5G vibration test
- High efficiency, long life and high reliability
- 3 years warranty

## SPECIFICATION

| MODEL | | RID-50A | | RID-50B | |
|---|---|---|---|---|---|
| OUTPUT | OUTPUT NUMBER | CH1 | CH2 | CH1 | CH2 |
| | DC VOLTAGE | 5V | 12V | 5V | 24V |
| | RATED CURRENT | 6A | 2A | 4A | 1.4A |
| | CURRENT RANGE | 0.3 ~ 6A | 0.3 ~ 3A | 0.3 ~ 6A | 0.2 ~ 2A |
| | RATED POWER | 54W | | 53.6W | |
| | RIPPLE & NOISE (max.) Note.2 | 80mVp-p | 120mVp-p | 80mVp-p | 150mVp-p |
| | VOLTAGE ADJ. RANGE | CH1: 4.75 ~ 5.5V | | CH1: 4.75 ~ 5.5V | |
| | VOLTAGE TOLERANCE Note.3 | ±2.0% | ±8.0% | ±2.0% | +4,-8.0% |
| | LINE REGULATION Note.4 | ±0.5% | ±1.5% | ±0.5% | ±1.5% |
| | LOAD REGULATION Note.5 | ±0.5% | ±5.0% | ±0.5% | ±5.0% |
| | SETUP, RISE TIME | 500ms, 20ms/230VAC 1200ms, 30ms/115VAC at full load | | | |
| | HOLD TIME (Typ.) | 60ms/230VAC 14ms/115VAC at full load | | | |
| INPUT | VOLTAGE RANGE | 88 ~ 264VAC 125 ~ 373VDC (Withstand 300VAC surge for 5sec. Without damage) | | | |
| | FREQUENCY RANGE | 47 ~ 63Hz | | | |
| | EFFICIENCY (Typ.) | 80% | | 81% | |
| | AC CURRENT (Typ.) | 1.3A/115VAC 0.8A/230VAC | | | |
| | INRUSH CURRENT (Typ.) | COLD START 33A/230VAC | | | |
| | LEAKAGE CURRENT | <2mA / 240VAC | | | |
| PROTECTION | OVER LOAD | 110 ~ 150% rated output power | | | |
| | | Protection type : Hiccup mode, recovers automatically after fault condition is removed | | | |
| | OVER VOLTAGE | CH1: 5.75 ~ 6.75V | | | |
| | | Protection type : Hiccup mode, recovers automatically after fault condition is removed | | | |
| ENVIRONMENT | WORKING TEMP. | -25 ~ +70℃ (Refer to output load derating curve) | | | |
| | WORKING HUMIDITY | 20 ~ 90% RH non-condensing | | | |
| | STORAGE TEMP., HUMIDITY | -40 ~ +85℃, 10 ~ 95% RH | | | |
| | TEMP. COEFFICIENT | ±0.03%/℃ (0 ~ 50℃)on +5V output | | | |
| | VIBRATION | 10 ~ 500Hz, 5G 10min./1cycle, period for 60min. each along X, Y, Z axes | | | |
| SAFETY & EMC (Note 6) | SAFETY STANDARDS | UL60950-1, TUV EN60950-1 Approved | | | |
| | WITHSTAND VOLTAGE | I/P-O/P:3KVAC I/P-FG:1.5KVAC O/P-FG:0.5KVAC | | | |
| | ISOLATION RESISTANCE | I/P-O/P, I/P-FG, O/P-FG:100M Ohms/500VDC | | | |
| | EMI CONDUCTION & RADIATION | Compliance to EN55022 (CISPR22) Class B | | | |
| | HARMONIC CURRENT | Compliance to EN61000-3-2,-3 | | | |
| | EMS IMMUNITY | Compliance to EN61000-4-2,3,4,5,6,8,11; ENV50204, EN61000-6-2 (EN50082-2) heavy industry level, criteria A | | | |
| OTHERS | MTBF | 172.6Khrs min. MIL-HDBK-217F (25℃) | | | |
| | DIMENSION | 99*97*36mm (L*W*H) | | | |
| | PACKING | 0.41Kg; 45pcs/19.5Kg/0.9CUFT | | | |
| NOTE | 1. All parameters NOT specially mentioned are measured at 230VAC input, rated load and 25℃ of ambient temperature.<br>2. Ripple & noise are measured at 20MHz of bandwidth by using a 12" twisted pair-wire terminated with a 0.1uf & 47uf parallel capacitor.<br>3. Tolerance : includes set up tolerance, line regulation and load regulation.<br>4. Line regulation is measured from low line to high line at rated load.<br>5. Load regulation is measured from 0% to 100% rated load.<br>6. The power supply is considered a component which will be installed into a final equipment. The final equipment must be re-confirmed that it still meets EMC directives. | | | | |

*File Name:RID-50-SPEC 2006-08-01*

MEAN WELL

50W Dual Output Switching Power Supply

# RID-50 series

## ■ Mechanical Specification

Case No. 905B Unit:mm

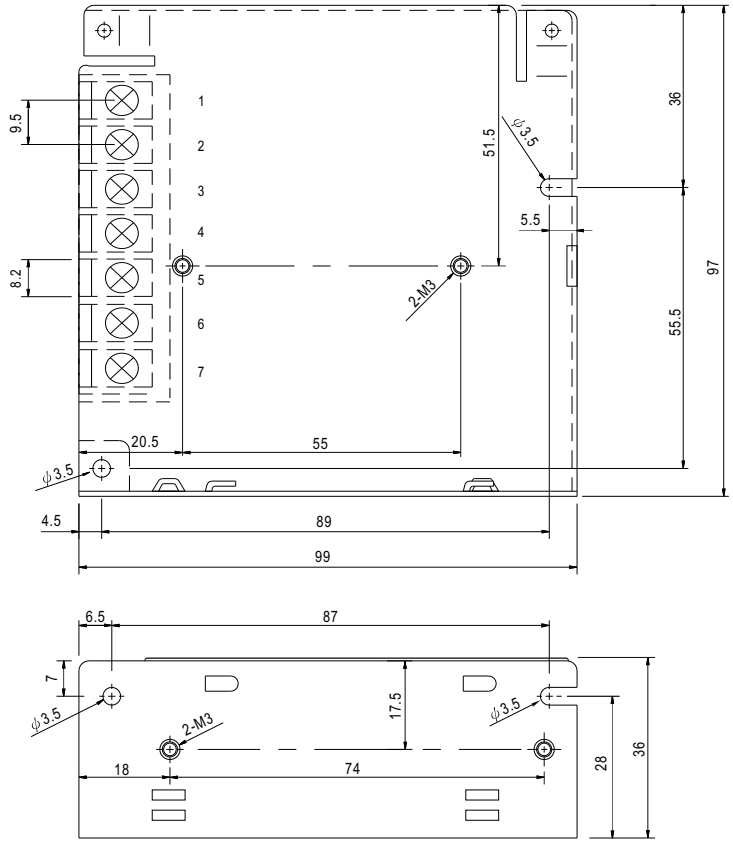


Terminal Pin. No Assignment

| Pin No. | Assignment | Pin No. | Assignment |
|---|---|---|---|
| 1 | AC/L | 5 | DC OUTPUT +V2 |
| 2 | AC/N | 6 | DC OUTPUT G1 |
| 3 | FG ⏚ | 7 | DC OUTPUT +V1 |
| 4 | DC OUTPUT G2 | | |

## ■ Derating Curve

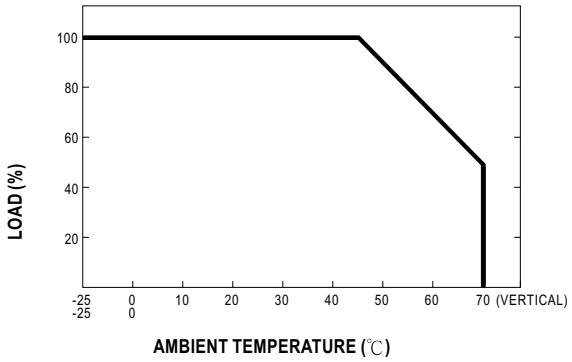


## ■ Output Derating VS Input Voltage

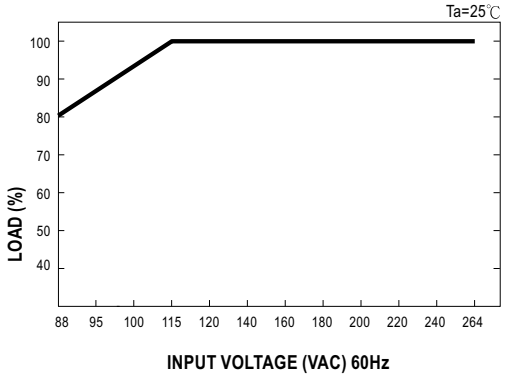


File Name:RID-50-SPEC 2006-08-01

PEWATRON
a member of the Angst + Pfister Group

# We are here for you. Addresses and Contacts

## Sales Switzerland

Postcode 3000 – 9999
Liechtenstein

Matthias Rüegg
Ruhbergstrasse 32
CH-9230 Flawil

Phone + 41 44 877 35 18
Mobile + 41 76 491 66 66
Fax + 41 44 877 35 19

matthias.rueegg@pewatron.com

Postcode 1000 – 2999

Raffael Favaretto
Route d'Oron 124
CH-1673 Promasens

Phone + 41 44 877 35 22
Mobile + 41 76 444 63 14
Fax + 41 44 877 35 23

raffael.favaretto@pewatron.com

## Sales Germany

Postcode 60000 – 79999

Dieter Hirthe
Mühlweg 23
D-71554 Weissach i.T.

Phone + 49 719 149 60 58
Mobile + 49 163 762 74 30
Fax + 49 719 193 31 88

dieter.hirthe@pewatron.com

Postcode 10000 – 59999
Postcode 80000 – 99999

Kurt Stritzelberger
Neumarkter Str. 86a
D-81673 Munich

Phone + 49 89 260 38 47
Mobile + 49 171 803 41 35
Fax + 49 89 43 10 91 91

kurt.stritzelberger@pewatron.com

Key Accounts
Aerospace and Defence

Claus Wübbena
Vogelkamp 26
D-26655 Westerstede

Phone + 49 4488 5204 614
Mobile + 49 173 9700 691
Fax + 49 4488 5204 616

claus.wuebbena@pewatron.com

## Sales Austria

Kurt Stritzelberger
Neumarkter Str. 86a
D-81673 Munich

Phone + 49 89 260 38 47
Mobile + 49 17 18 03 41 35
Fax + 49 89 43 10 91 91

kurt.stritzelberger@pewatron.com

## Sales Other Countries / Product Management

### Sensors

Physical Sensors
Data Acquisition

Peter Felder
Phone + 41 44 877 35 05
peter.felder@pewatron.com

Geometrical Sensors

Eric Letsch
Phone + 41 44 877 35 14
eric.letsch@pewatron.com

### Power Supplies

DC-DC Converters
Switching Power Supplies
DC-AC Inverters

Sebastiano Leggio
Phone + 41 44 877 35 06
sebastiano.leggio@pewatron.com

### E-Components

Current Sensors
Man Machine Interface
Measurement Probes

Sebastiano Leggio
Phone + 41 44 877 35 06
sebastiano.leggio@pewatron.com

PEWATRON AG
Thurgauerstrasse 66
CH-8052 Zurich

Phone + 41 44 877 35 00
Fax + 41 44 877 35 25

www.pewatron.com
info@pewatron.com