MEAN WELL

150W Triple Output with PFC Function

TP-150 series

■ Features :

- Universal AC input / Full range
- Built-in active PFC function, PF>0.94
- Protections: Short circuit / Overload / Over voltage
- Forced air cooling by built-in DC fan
- Fixed switching frequency at 100KHz
- 3 years warranty

SPECIFICATION

MODEL		TP-150A			TP-150B			TP-150C			TP-150D		
OUTPUT	OUTPUT NUMBER	CH1	CH2	CH3	CH1	CH2	CH3	CH1	CH2	CH3	CH1	CH2	CH3
	DC VOLTAGE	5V	12V	-5V	5V	12V	-12V	5V	15V	-15V	5V	24V	12V
	RATED CURRENT	15A	6A	0.6A	15A	5.5A	0.6A	15A	4.5A	0.6A	15A	3A	0.6A
	CURRENT RANGE	2 ~ 20A	0.4 ~ 7A	0 ~ 1A	2 ~ 20A	0.4 ~ 7A	0 ~ 1A	2 ~ 20A	0.4 ~ 6A	0 ~ 1A	2 ~ 20A	0.4 ~ 4A	0 ~ 1A
	RATED POWER	150W			148.2W			151.5W			154.2W		
	RIPPLE & NOISE (max.) Note.2	100mVp-p	120mVp-p	100mVp-p	100mVp-p	120mVp-p	100mVp-p	100mVp-p	150mVp-p	100mVp-p	100mVp-p	150mVp-p	100mVp-p
	VOLTAGE ADJ. RANGE	CH1: 4.75 ~ 5.5V											
	VOLTAGE TOLERANCE Note.3	3.0%	8.0%	6.0%	3.0%	8.0%	6.0%	3.0%	+10,-6%	6.0%	3.0%	8.0%	6.0%
	LINE REGULATION	1.0%	1.0%	1.0%	1.0%	1.0%	1.0%	1.0%	1.0%	1.0%	1.0%	1.0%	1.0%
	LOAD REGULATION	3.0%	6.0%	4.0%	3.0%	6.0%	4.0%	3.0%	6.0%	4.0%	3.0%	6.0%	4.0%
	SETUP, RISE TIME	800ms, 60ms/230VAC 800ms, 60ms/115VAC at full load											
	HOLD UP TIME (Typ.)	24ms/230VAC 24ms/115VAC at full load											
INPUT	VOLTAGE RANGE	90 ~ 264VAC 127 ~ 370VDC											
	FREQUENCY RANGE	47 ~ 63Hz											
	POWER FACTOR (Typ.)	PF>0.94/230VAC PF>0.98/115VAC at full load											
	EFFICIENCY (Typ.)	75%			77%			77%			78%		
	AC CURRENT (Typ.)	2.5A/115VAC 1.2A/230VAC											
	INRUSH CURRENT (Typ.)	COLD START ≦40A/230V											
	LEAKAGE CURRENT	<3.5mA / 240VAC											
PROTECTION	OVERLOAD	105 ~ 150% rated output power											
		Protection type : Hiccup mode, recovers automatically after fault condition is removed											
	OVER VOLTAGE	5.75 ~ 6.75V on +5V											
		Protection type : Shut down o/p voltage, re-power on to recover											
	OVER TEMPERATURE(OPTION)	95℃ 5℃ (TSW1)											
		Protection type : Shut down o/p voltage, recovers automatically after temperature goes down											
ENVIRONMENT	WORKING TEMP.	-10 ~ +60℃ (Refer to output load derating curve)											
	WORKING HUMIDITY	20 ~ 90% RH non-condensing											
	STORAGE TEMP., HUMIDITY	-20 ~ +85℃, 10 ~ 95% RH											
	TEMP. COEFFICIENT	0.03%/℃ (0~50℃)											
	VIBRATION	10 ~ 500Hz, 2G 10min./1cycle, 60min. each along X, Y, Z axes											
SAFETY & EMC (Note 4)	SAFETY STANDARDS	UL60950-1, TUV EN60950-1 approved											
	WITHSTAND VOLTAGE	I/P-O/P:3KVAC I/P-FG:1.5KVAC O/P-FG:0.5KVAC 1min.											
	ISOLATION RESISTANCE	I/P-O/P, I/P-FG, O/P-FG:100M Ohms/500VDC											
	EMI CONDUCTION & RADIATION	Compliance to EN55022 (CISPR22) Class B											
	HARMONIC CURRENT	Compliance to EN61000-3-2,-3											
	EMS IMMUNITY	Compliance to EN61000-4-2,3,4,5,6,8,11; ENV50204, EN55024, light industry level, criteria A											
OTHERS	MTBF	161.6K hrs min. MIL-HDBK-217F (25℃)											
	DIMENSION	199*99*50mm (L*W*H)											
	PACKING	0.9Kg; 20pcs/19Kg/1.28CUFT											
NOTE	1. All parameters NOT specially mentioned are measured at 230VAC input, rated load and 25℃ of ambient temperature. 2. Ripple & noise are measured at 20MHz of bandwidth by using a 12" twisted pair-wire terminated with a 0.1uf & 47uf parallel capacitor. 3. Tolerance : includes set up tolerance, line regulation and load regulation. 4. The power supply is considered a component which will be installed into a final equipment. The final equipment must be re-confirmed that it still meets EMC directives.												

File Name:TP-150-SPEC 2007-10-25

MEAN WELL

150W Triple Output with PFC Function

TP-150 series

■ Mechanical Specification

Case No. 916B Unit:mm

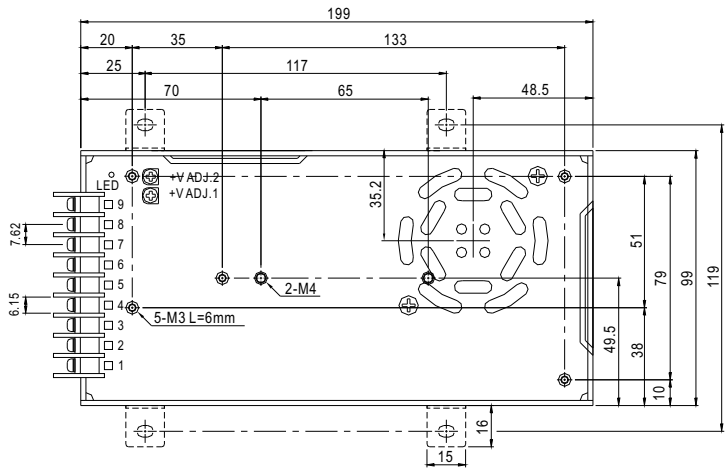

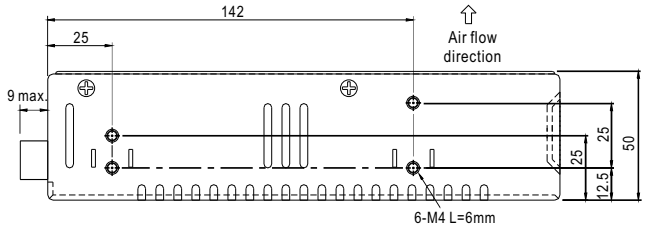

Terminal Pin No. Assignment :

Pin No.	Assignment	Pin No.	Assignment
1	AC/L	5	DC OUTPUT V2
2	AC/N	6,7	DC OUTPUT V1
3	FG ⏚	8,9	DC OUTPUT COM
4	DC OUTPUT V3		

■ Block Diagram

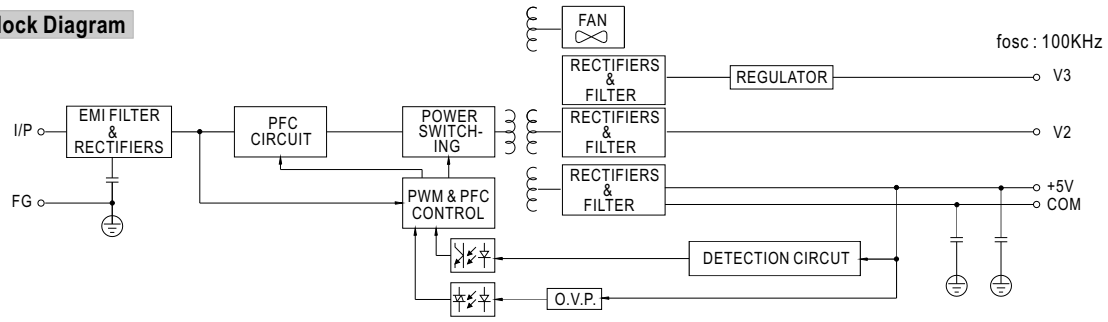

■ Derating Curve

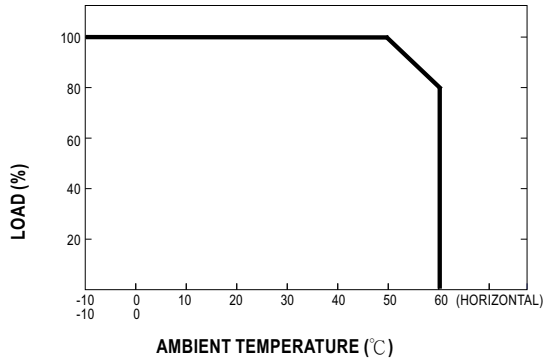

■ Output Derating VS Input Voltage

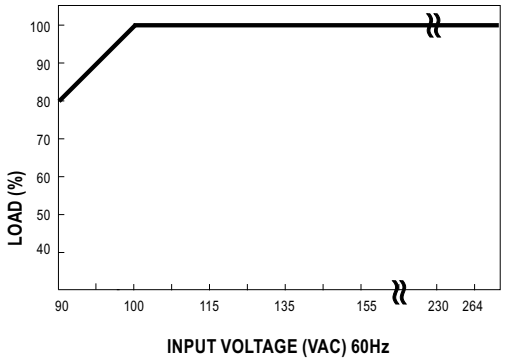

File Name:TP-150-SPEC 2007-10-25

PEWATRON
a member of the Angst + Pfister Group

We are here for you. Addresses and Contacts

Sales Switzerland

Postcode 3000 – 9999
Liechtenstein

Matthias Rüegg
Ruhbergstrasse 32
CH-9230 Flawil

Phone + 41 44 877 35 18
Mobile + 41 76 491 66 66
Fax + 41 44 877 35 19

matthias.rueegg@pewatron.com

Postcode 1000 – 2999

Raffael Favaretto
Route d'Oron 124
CH-1673 Promasens

Phone + 41 44 877 35 22
Mobile + 41 76 444 63 14
Fax + 41 44 877 35 23

raffael.favaretto@pewatron.com

Sales Germany

Postcode 60000 – 79999

Dieter Hirthe
Mühlweg 23
D-71554 Weissach i.T.

Phone + 49 719 149 60 58
Mobile + 49 163 762 74 30
Fax + 49 719 193 31 88

dieter.hirthe@pewatron.com

Postcode 10000 – 59999
Postcode 80000 – 99999

Kurt Stritzelberger
Neumarkter Str. 86a
D-81673 Munich

Phone + 49 89 260 38 47
Mobile + 49 171 803 41 35
Fax + 49 89 43 10 91 91

kurt.stritzelberger@pewatron.com

Key Accounts
Aerospace and Defence

Claus Wübbena
Vogelkamp 26
D-26655 Westerstede

Phone + 49 4488 5204 614
Mobile + 49 173 9700 691
Fax + 49 4488 5204 616

claus.wuebbena@pewatron.com

Sales Austria

Kurt Stritzelberger
Neumarkter Str. 86a
D-81673 Munich

Phone + 49 89 260 38 47
Mobile + 49 17 18 03 41 35
Fax + 49 89 43 10 91 91

kurt.stritzelberger@pewatron.com

Sales Other Countries / Product Management

Sensors

Physical Sensors
Data Acquisition

Peter Felder
Phone + 41 44 877 35 05
peter.felder@pewatron.com

Geometrical Sensors

Eric Letsch
Phone + 41 44 877 35 14
eric.letsch@pewatron.com

Power Supplies

DC-DC Converters
Switching Power Supplies
DC-AC Inverters

Sebastiano Leggio
Phone + 41 44 877 35 06
sebastiano.leggio@pewatron.com

E-Components

Current Sensors
Man Machine Interface
Measurement Probes

Sebastiano Leggio
Phone + 41 44 877 35 06
sebastiano.leggio@pewatron.com

PEWATRON AG
Thurgauerstrasse 66
CH-8052 Zurich

Phone + 41 44 877 35 00
Fax + 41 44 877 35 25

www.pewatron.com
info@pewatron.com