MEAN WELL

60W Single Output Switching Power Supply

CLG-60 series

■ Features :

- Universal AC input / Full range
- Protections: Short circuit / Overload / Over voltage / Over temperature
- Built-in active PFC function
- IP67 design for indoor or outdoor installations
- UL1310 Class 2 power unit
- Cooling by free air convection
- 100% full load burn-in test
- High reliability
- Suitable for LED lighting and moving sign applications
- 3 years warranty

F 110 M M SELV EQUIVALENT LPS (for 48V only) c US (except for 48V) IP67 PFC

SPECIFICATION

MODEL		CLG-60-12	CLG-60-15	CLG-60-20	CLG-60-24	CLG-60-27	CLG-60-36	CLG-60-48
OUTPUT	DC VOLTAGE	12V	15V	20V	24V	27V	36V	48V
	CONSTANT CURRENT REGION Note.6	8.4 ~ 12V	10.5 ~ 15V	14 ~ 20V	16.8 ~ 24V	18.9 ~ 27V	25.2 ~ 36V	33.6 ~ 48V
	RATED CURRENT	5A	4A	3A	2.5A	2.3A	1.7A	1.3A
	CURRENT RANGE	0 ~ 5A	0 ~ 4A	0 ~ 3A	0 ~ 2.5A	0 ~ 2.3A	0 ~ 1.7A	0 ~ 1.3A
	RATED POWER	60W	60W	60W	60W	62.1W	61W	62.5W
	RIPPLE & NOISE (max.) Note.2	2Vp-p	2.4Vp-p	1.8Vp-p	2.7Vp-p	2.7Vp-p	3.6Vp-p	4.6Vp-p
	VOLTAGE ADJ. RANGE	11 ~ 13V	13.8 ~ 16.2V	18 ~ 22V	22 ~ 26V	25 ~ 30V	32.5 ~ 39V	43.6 ~ 51.8V
		Fixed can be modified between the range above						
	CURRENT ADJ. RANGE	Fixed can be modified between 3% ~ 25% rated output current						
	VOLTAGE TOLERANCE Note.3	±10%						
	LINE REGULATION	±4.0%						
	LOAD REGULATION	±10%						
	SETUP, RISE TIME	1500ms, 100ms / 230VAC 3000ms, 100ms / 115VAC at full load						
INPUT	VOLTAGE RANGE Note.5	90 ~ 264VAC 127 ~ 370VDC						
	FREQUENCY RANGE	47 ~ 63Hz						
	POWER FACTOR	PF>0.9/230VAC PF>0.98/115VAC at full load						
	EFFICIENCY(Typ.)	83%	84.5%	86.5%	86.5%	87%	87%	88%
	AC CURRENT	0.8A/115VAC 0.4A/230VAC						
	INRUSH CURRENT(max.)	40A/230VAC						
	LEAKAGE CURRENT	0.5mA / 240VAC						
PROTECTION	OVER CURRENT	95 ~ 110%	130% (max)					
		Protection type : Constant current limiting, recovers automatically after fault condition is removed						
	SHORT CIRCUIT Note.4	Hiccup mode, recovers automatically after fault condition is removed.						
	OVER VOLTAGE	13.8 ~ 16V	17.5 ~ 21V	22.8 ~ 25V	28 ~ 32V	31 ~ 35V	41 ~ 46V	54 ~ 60V
		Protection type : Shut down o/p voltage, re-power on to recover						
	OVER TEMPERATURE	12V: 90℃ ±10℃ (TSW1) detect on heatsink of power transistor						
		15V ~ 48V: 85℃ ±10℃ (TSW1) detect on heatsink of power transistor						
		Protection type : Shut down o/p voltage, recovers automatically after temperature goes down						
ENVIRONMENT	WORKING TEMP.	-30 ~ +70℃ (Refer to output load derating curve)						
	WORKING HUMIDITY	20 ~ 90% RH non-condensing						
	STORAGE TEMP., HUMIDITY	-40 ~ +80℃, 10 ~ 95% RH						
	TEMP. COEFFICIENT	±0.03%/℃ (0 ~ 50℃)						
	VIBRATION	10 ~ 500Hz, 2G 10min./1cycle, period for 60min. each along X, Y, Z axes						
SAFETY & EMC	SAFETY STANDARDS	UL1310 Class 2, TUV EN61347-1, EN61347-2-13, CAN/CSA C22.2 No. 223-M91(except for 48V), IP67 approved						
	WITHSTAND VOLTAGE	I/P-O/P:4.25KVDC						
	ISOLATION RESISTANCE	I/P-O/P:100M Ohms / 500VDC / 25℃/ 70% RH						
	EMI CONDUCTION & RADIATION	Compliance to EN55015, EN55022 (CISPR22) Class B						
	HARMONIC CURRENT	Compliance to EN61000-3-2 Class C (>50% load) ; EN61000-3-3						
	EMS IMMUNITY	Compliance to EN61000-4-2,3,4,5,6,8,11; ENV50204, EN55024, EN61547, light industry level, criteria A						
OTHERS	MTBF	495.7Khrs min. MIL-HDBK-217F (25℃)						
	DIMENSION	172*61.5*39mm (L*W*H)						
	PACKING	0.86Kg; 16pcs/14.8Kg/0.54CUFT						
NOTE	1. All parameters NOT specially mentioned are measured at 230VAC input, rated load and 25℃ of ambient temperature. 2. Ripple & noise are measured at 20MHz of bandwidth by using a 12" twisted pair-wire terminated with a 0.1uf & 47uf parallel capacitor. 3. Tolerance : includes set up tolerance, line regulation and load regulation. 4. Please refer to OLP characteristics. 5. Derating may be needed under low input voltage. Please check the derating curve for more details. 6. Constant current operation region is within 70% ~100% rated output voltage. This is the suitable operation region for LED related applications, but please reconfirm special electrical requirements for some specific system design.							

File Name:CLG-60-SPEC 2008-08-18

MEAN WELL

60W Single Output Switching Power Supply

CLG-60 series

■ Mechanical Specification

Case No. 957A Unit:mm

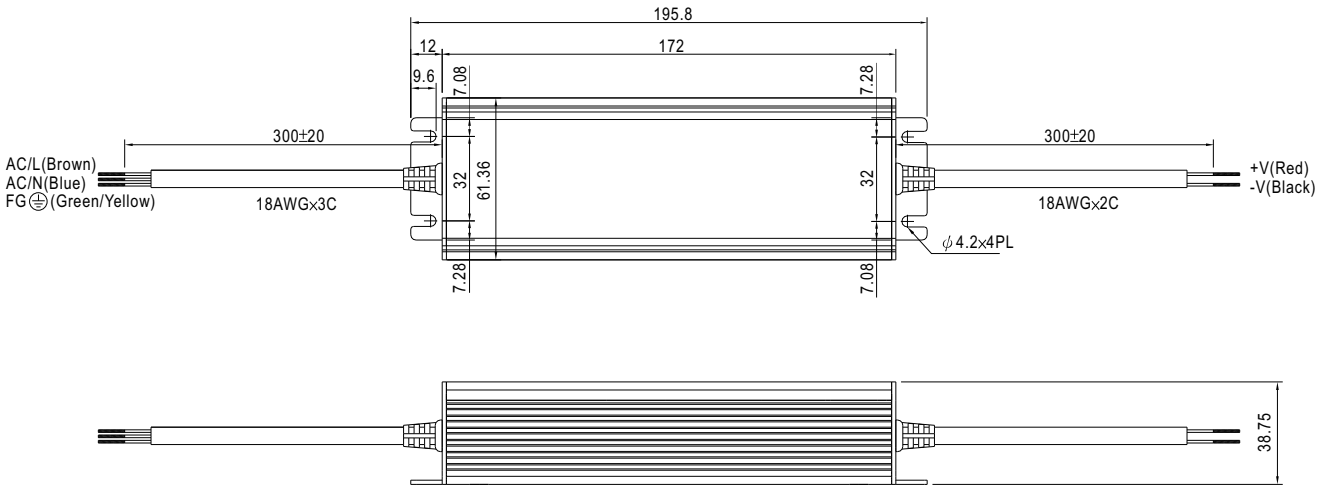

■ Block Diagram

fosc : 90KHz(115VAC)
120KHz(230VAC)

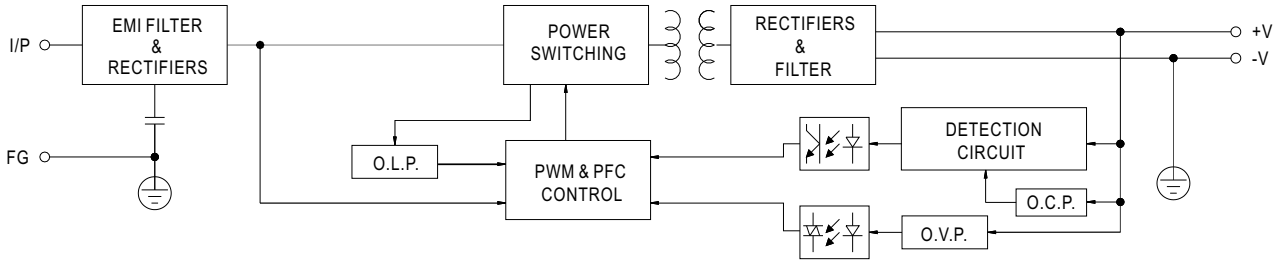

■ Derating Curve

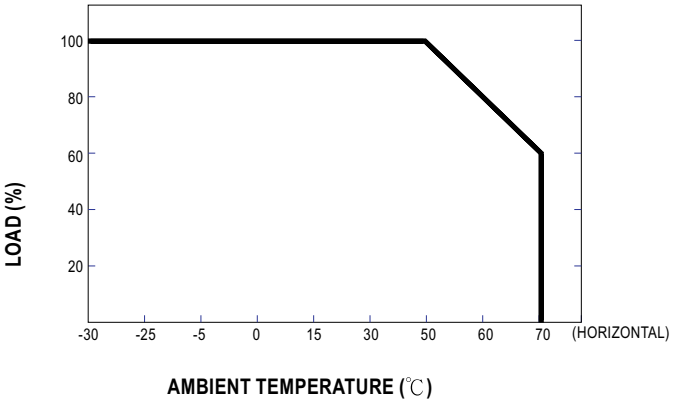

■ Static Characteristics

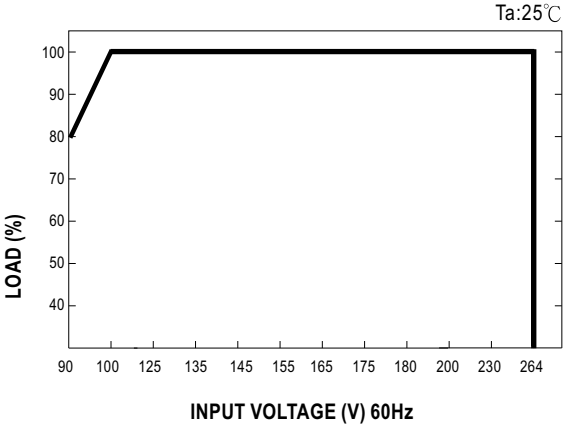

Supporting your great ideas
www.pewatron.com
PEWATRON
a member of the Angst + Pfister Group

PEWATRON
a member of the Angst + Pfister Group

We are here for you. Addresses and Contacts

Sales Switzerland

Postcode 3000 – 9999
Liechtenstein

Matthias Rüegg
Ruhbergstrasse 32
CH-9230 Flawil

Phone + 41 44 877 35 18
Mobile + 41 76 491 66 66
Fax + 41 44 877 35 19

matthias.rueegg@pewatron.com

Postcode 1000 – 2999

Raffael Favaretto
Route d'Oron 124
CH-1673 Promasens

Phone + 41 44 877 35 22
Mobile + 41 76 444 63 14
Fax + 41 44 877 35 23

raffael.favaretto@pewatron.com

Sales Germany

Postcode 60000 – 79999

Dieter Hirthe
Mühlweg 23
D-71554 Weissach i.T.

Phone + 49 719 149 60 58
Mobile + 49 163 762 74 30
Fax + 49 719 193 31 88

dieter.hirthe@pewatron.com

Postcode 10000 – 59999
Postcode 80000 – 99999

Kurt Stritzelberger
Neumarkter Str. 86a
D-81673 Munich

Phone + 49 89 260 38 47
Mobile + 49 171 803 41 35
Fax + 49 89 43 10 91 91

kurt.stritzelberger@pewatron.com

Key Accounts
Aerospace and Defence

Claus Wübbena
Vogelkamp 26
D-26655 Westerstede

Phone + 49 4488 5204 614
Mobile + 49 173 9700 691
Fax + 49 4488 5204 616

claus.wuebbena@pewatron.com

Sales Austria

Kurt Stritzelberger
Neumarkter Str. 86a
D-81673 Munich

Phone + 49 89 260 38 47
Mobile + 49 17 18 03 41 35
Fax + 49 89 43 10 91 91

kurt.stritzelberger@pewatron.com

Sales Other Countries / Product Management

Sensors

Physical Sensors
Data Acquisition

Peter Felder
Phone + 41 44 877 35 05
peter.felder@pewatron.com

Geometrical Sensors

Eric Letsch
Phone + 41 44 877 35 14
eric.letsch@pewatron.com

Power Supplies

DC-DC Converters
Switching Power Supplies
DC-AC Inverters

Sebastiano Leggio
Phone + 41 44 877 35 06
sebastiano.leggio@pewatron.com

E-Components

Current Sensors
Man Machine Interface
Measurement Probes

Sebastiano Leggio
Phone + 41 44 877 35 06
sebastiano.leggio@pewatron.com

PEWATRON AG
Thurgauerstrasse 66
CH-8052 Zurich

Phone + 41 44 877 35 00
Fax + 41 44 877 35 25

www.pewatron.com
info@pewatron.com