MEAN WELL

100W AC-DC ATX Power Adaptor

ATX-100

■ Features :

- Universal AC input / Full range
- 3 pole AC inlet IEC320-C14
- Built-in active PFC function, PF>0.95
- Class I power (with earth pin)
- Protections: Short circuit / Overload / Over voltage / Over temperature
- Fully enclosed plastic case
- LED indicator for power on
- No load power consumption < 1W @240VAC
- 2 years warranty

SPECIFICATION

MODEL		ATX-100				
OUTPUT	OUTPUT NUMBER	CH1	CH2	CH3	CH4	CH5
	DC VOLTAGE	3.3V	5V	12V	-12V	5VSB
	RATED CURRENT	5A	6A	3.75A	0.3A	1A
	CURRENT RANGE	0 ~ 6A	0 ~ 8A	1 ~ 7A	0 ~ 0.5A	0 ~ 2A (Note.7)
	RATED POWER Note.8,9	50W		------		
		100W(continue), 125W(7min.), 150W(3min.)				
	RIPPLE & NOISE (max.) Note.2	100mVp-p	100mVp-p	120mVp-p	120mVp-p	100mVp-p
	VOLTAGE TOLERANCE Note.3	±5.0%	±5.0%	±5.0%	±10%	±5.0%
	LINE REGULATION	±1.0%	±1.0%	±1.0%	±1.0%	±1.0%
	LOAD REGULATION	±5.0%	±5.0%	±5.0%	±10%	±5.0%
	SETUP, RISE TIME	3000ms, 80ms at full load				
	HOLD UP TIME(Typ.)	40ms at full load				
INPUT	VOLTAGE RANGE Note.10	90 ~ 264VAC 127 ~ 370VDC				
	FREQUENCY RANGE	47 ~ 63Hz				
	POWER FACTOR (Typ.)	PF>0.95 at full load				
	EFFICIENCY(Typ.)	80%				
	AC CURRENT (Typ.)	1.4A/115AVC 0.7A/230VAC				
	INRUSH CURRENT (Typ.)	COLD START < 60A at 230VAC				
	LEAKAGE CURRENT (max.)	<2mA / 240VAC				
PROTECTION	OVERLOAD	6.2A min.	8.2A min.	7.2A min.	------	------
		Protection type : Shut down o/p voltage(except for 5VSB), re-power on to recover				
	OVER VOLTAGE	3.7 ~ 4.1V	5.7 ~ 6.5V	13.2 ~ 14.4V	------	------
		Protection type : Shut down o/p voltage(except for 5VSB), re-power on to recover				
	OVER TEMPERATURE	100℃±5℃ (TSW1:detect on heatsink of power transistor)				
		Protection type : Shut down o/p voltage(except for 5VSB), re-power on to recover				
SIGNAL FUNCTION	POWER OK	TTL compatible signal with 100 ~ 500ms delay after set up				
	PS-ON	Power ON:PS-ON="Low" or "<0.8V"; Power OFF:PS-ON="Hi" or ">2V"				
ENVIRONMENT	WORKING TEMP.	0 ~ +50℃ (Refer to output load derating curve)				
	WORKING HUMIDITY	20 ~ 90% RH non-condensing				
	STORAGE TEMP., HUMIDITY	-20 ~ +85℃, 10 ~ 95% RH				
	TEMP. COEFFICIENT	±0.05%/℃ (0 ~ 60℃)				
	VIBRATION	10 ~ 500Hz, 2G 10min./1cycle, period for 60min. each along X, Y, Z axes				
SAFETY & EMC (Note 6)	SAFETY STANDARDS	Design refer to UL60950-1, IEC60950-1 CB approved by TUV				
	WITHSTAND VOLTAGE	I/P-O/P:3KVAC				
	ISOLATION RESISTANCE	I/P-O/P:>100M Ohms/500VDC 25℃ 70%RH				
	EMI CONDUCTION & RADIATION	Compliance to EN55022 (CISPR22) Class B, EN61204-3				
	HARMONIC CURRENT	Compliance to EN61000-3-2,-3				
	EMS IMMUNITY	Compliance to EN61000-4-2,3,4,5,6,8,11; ENV50204, EN55024, light industry level, criteria A				
OTHERS	MTBF	152Khrs min. MIL-HDBK-217F (25℃)				
	DIMENSION	210*85*46mm(L*W*H)				
	PACKING	1.12Kg; 12pcs/14.5Kg/0.95CUFT				

NOTE

1. All parameters NOT specially mentioned are measured at 230VAC input, rated load and 25℃ of ambient temperature.
2. Ripple & noise are measured at 20MHz of bandwidth by using a 12" twisted pair-wire terminated with a 0.1uf & 47uf parallel capacitor.
3. Tolerance : includes set up tolerance, line regulation and load regulation.
4. Line regulation is measured from low line to high line at rated load.
5. Each output power up to maximum current, but total load cannot exceed maximum output power(100W).
6. The power supply is considered a component which will be installed into a final equipment. The final equipment must be re-confirmed that it still meets EMC directives.
7. 5VSB peak load 2A< 10sec.
8. Total power of 5V, 3.3V should less than 50W.
9. 125W peak load duty 7min./hr, 150W peak load duty 3min./hr.
10. Derating may be needed under low input voltage. Please check the derating curve for more details.
11. 2 years warranty is based on 12hrs/day of operating time for the unit.

MEAN WELL

100W AC-DC ATX Power Adaptor

ATX-100

■ Mechanical Specification

Case No.961A Unit:mm

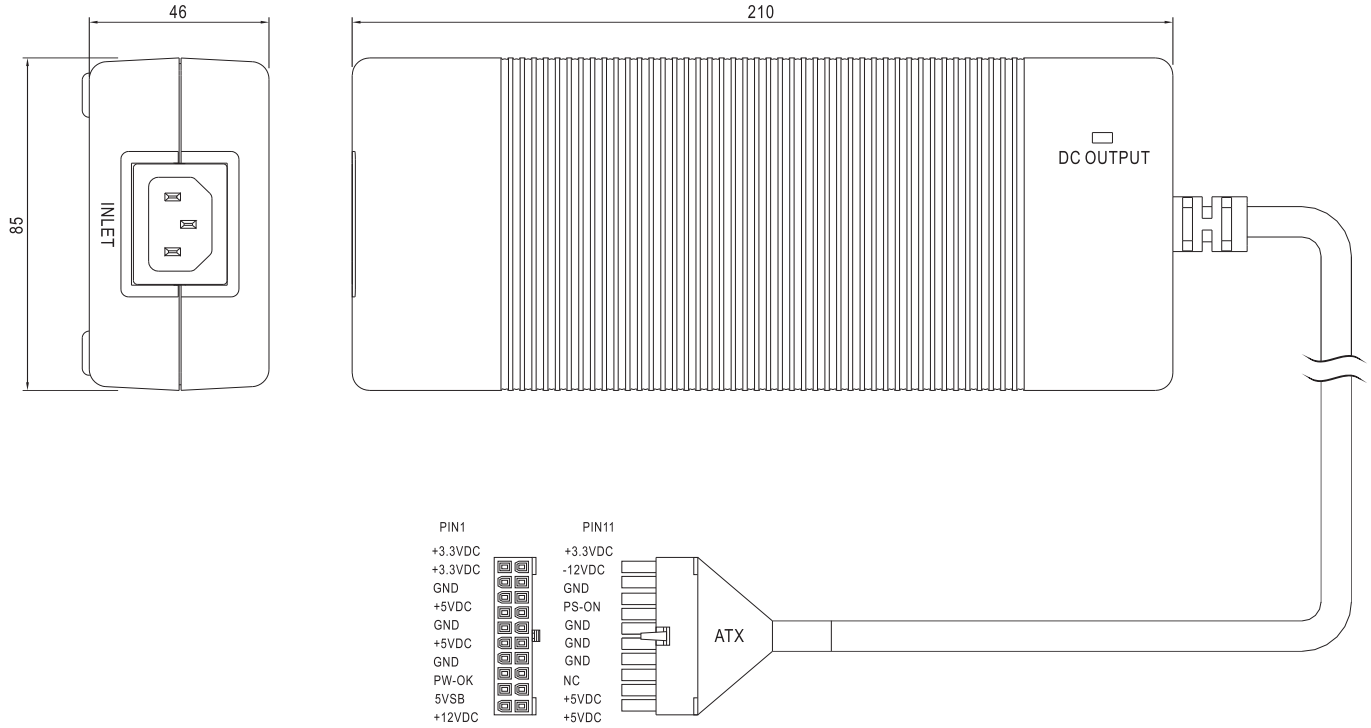

Type: MOLEX 39-01-2200 or equivalent
L=650mm±50mm

■ Block Diagram

fosc : 88KHz

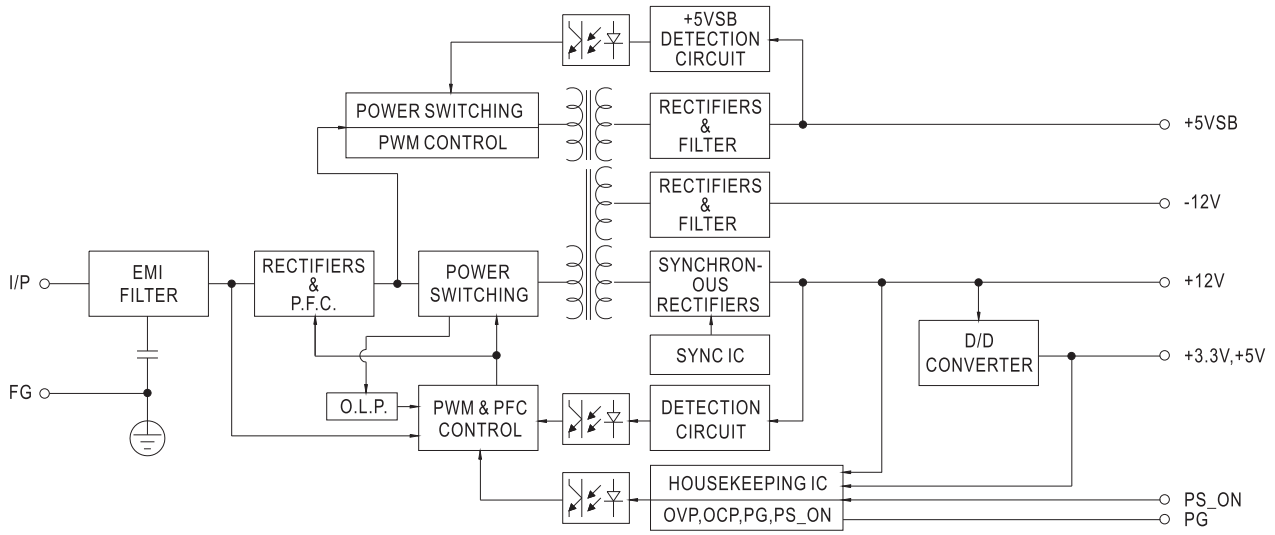

Supporting your great ideas www.pewatron.com PEWATRON a member of the Angst + Pfister Group

Sequence

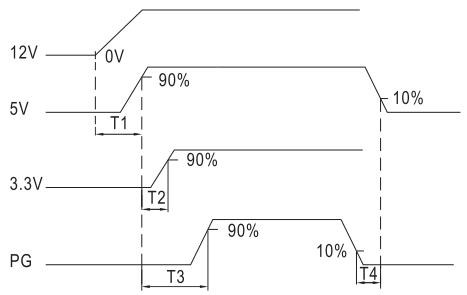

T1 : 0~20ms (±20%)
T2 : 0~15ms(±20%)
T3 : 100~500ms
T4 : 0~30ms

Derating Curve

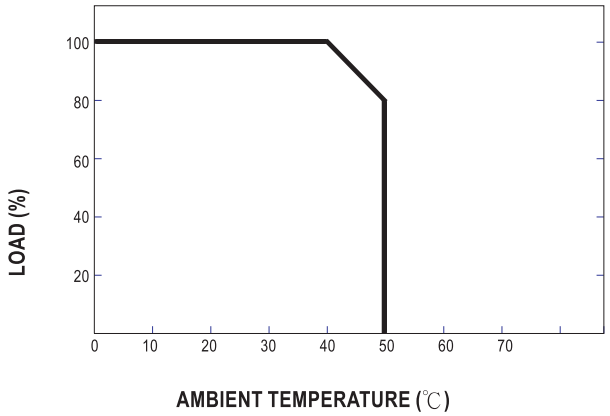

Output Load VS Input Voltage

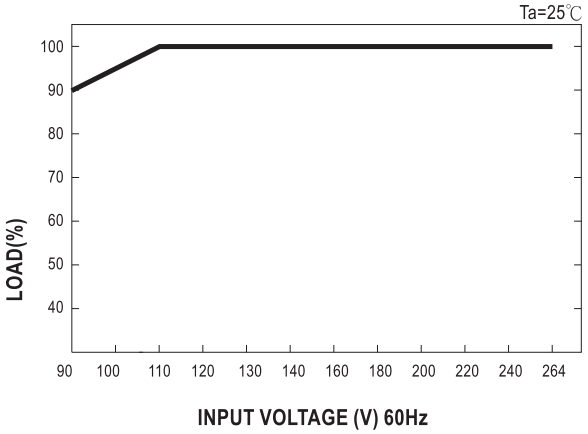

Supporting your great ideas

www.pewatron.com

PEWATRON
a member of the Angst + Pfister Group

PEWATRON
a member of the Angst + Pfister Group

We are here for you. Addresses and Contacts

Sales Switzerland

Postcode 3000 – 9999
Liechtenstein

Matthias Rüegg
Ruhbergstrasse 32
CH-9230 Flawil

Phone + 41 44 877 35 18
Mobile + 41 76 491 66 66
Fax + 41 44 877 35 19

matthias.rueegg@pewatron.com

Postcode 1000 – 2999

Raffael Favaretto
Route d'Oron 124
CH-1673 Promasens

Phone + 41 44 877 35 22
Mobile + 41 76 444 63 14
Fax + 41 44 877 35 23

raffael.favaretto@pewatron.com

Sales Germany

Postcode 60000 – 79999

Dieter Hirthe
Mühlweg 23
D-71554 Weissach i.T.

Phone + 49 719 149 60 58
Mobile + 49 163 762 74 30
Fax + 49 719 193 31 88

dieter.hirthe@pewatron.com

Postcode 10000 – 59999
Postcode 80000 – 99999

Kurt Stritzelberger
Neumarkter Str. 86a
D-81673 Munich

Phone + 49 89 260 38 47
Mobile + 49 171 803 41 35
Fax + 49 89 43 10 91 91

kurt.stritzelberger@pewatron.com

Key Accounts
Aerospace and Defence

Claus Wübbena
Vogelkamp 26
D-26655 Westerstede

Phone + 49 4488 5204 614
Mobile + 49 173 9700 691
Fax + 49 4488 5204 616

claus.wuebbena@pewatron.com

Sales Austria

Kurt Stritzelberger
Neumarkter Str. 86a
D-81673 Munich

Phone + 49 89 260 38 47
Mobile + 49 17 18 03 41 35
Fax + 49 89 43 10 91 91

kurt.stritzelberger@pewatron.com

Sales Other Countries / Product Management

Sensors

Physical Sensors
Data Acquisition

Peter Felder
Phone + 41 44 877 35 05
peter.felder@pewatron.com

Geometrical Sensors

Eric Letsch
Phone + 41 44 877 35 14
eric.letsch@pewatron.com

Power Supplies

DC-DC Converters
Switching Power Supplies
DC-AC Inverters

Sebastiano Leggio
Phone + 41 44 877 35 06
sebastiano.leggio@pewatron.com

E-Components

Current Sensors
Man Machine Interface
Measurement Probes

Sebastiano Leggio
Phone + 41 44 877 35 06
sebastiano.leggio@pewatron.com

PEWATRON AG
Thurgauerstrasse 66
CH-8052 Zurich

Phone + 41 44 877 35 00
Fax + 41 44 877 35 25

www.pewatron.com
info@pewatron.com