MEAN WELL

65W Triple Output Switching Power Supply

RPT-65 series

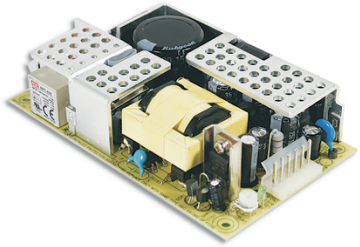

■ Features :

- Universal AC input/Full range
- 12V or 24V high peak output current capability
- **Optional L-Bracket and cover**
- Low leakage current<1mA
- Protections: Short circuit / Overload / Over voltage
- 65W free air convection, 80W with 18CFM forced air
- 100% full load burn-in test
- Fixed switching frequency at 65KHz
- 2 years warranty

SPECIFICATION

MODEL		RPT-65E			RPT-65F			RPT-65G		
OUTPUT	OUTPUT NUMBER	CH1	CH2	CH3	CH1	CH2	CH3	CH1	CH2	CH3
	DC VOLTAGE	12V	5V	-5V	12V	5V	-12V	24V	5V	12V
	RATED CURRENT	4.5A	1.2A	0.5A	4.5A	1.2A	0.5A	2.25A	1.2A	0.5A
	CURRENT RANGE	0.18 ~ 5.8A	0 ~ 1.5A	0 ~ 0.7A	0.18 ~ 5.8A	0 ~ 1.5A	0 ~ 0.7A	0.09 ~ 2.9A	0 ~ 1.5A	0 ~ 0.7A
	PEAK LOAD Note.4	7.5A	Rated load	Rated load	7.5A	Rated load	Rated load	3.75A	Rated load	Rated load
	RATED POWER	62.5W			66W			66W		
	OUTPUT POWER (max.)	Rated output power for convection; 80W with 18CFM min. forced air								
	RIPPLE & NOISE (max.) Note.2	120mVp-p	100mVp-p	120mVp-p	150mVp-p	100mVp-p	150mVp-p	150mVp-p	50mVp-p	100mVp-p
	VOLTAGE ADJ. RANGE	CH1:11.4 ~ 12.8V			CH1:11.4 ~ 12.8V			CH1:22.8 ~ 26.4V		
	VOLTAGE TOLERANCE Note.3	±2.0%	±5.0%	±5.0%	±2.0%	±5.0%	±5.0%	±2.0%	±5.0%	±5.0%
	LINE REGULATION	±1.0%	±1.0%	±1.0%	±1.0%	±1.0%	±1.0%	±1.0%	±1.0%	±1.0%
	LOAD REGULATION	±2.0%	±5.0%	±5.0%	±2.0%	±5.0%	±5.0%	±2.0%	±5.0%	±5.0%
	SETUP, RISE TIME	800ms, 20ms at full load								
	HOLD UP TIME (Typ.)	20ms at full load								
INPUT	VOLTAGE RANGE	90 ~ 264VAC 127 ~370VDC								
	FREQUENCY RANGE	47 ~ 440Hz								
	EFFICIENCY (Typ.)	77%			77%			81%		
	AC CURRENT (Typ.)	1.5A/115VAC 0.9A/230VAC								
	INRUSH CURRENT (Typ.)	COLD START 25A/115VAC 50A/230VAC								
	LEAKAGE CURRENT	<1mA								
PROTECTION	OVERLOAD	90 ~ 125W output power								
		Protection type : Hiccup mode, recovers automatically after fault condition is removed.								
	OVER VOLTAGE	CH1:13.8 ~ 16.2V			CH1:13.8 ~ 16.2V			CH1:27.6 ~ 32.4V		
		Protection type : Hiccup mode, recovers automatically after fault condition is removed.								
ENVIRONMENT	WORKING TEMP.	-20 ~ +60℃ (Refer to output load derating curve)								
	WORKING HUMIDITY	20 ~ 90% RH non-condensing								
	STORAGE TEMP., HUMIDITY	-40 ~ +85℃, 10 ~ 95% RH								
	TEMP. COEFFICIENT	±0.04%/℃ (0 ~ 50℃) on CH1 output								
	VIBRATION	10 ~ 500Hz, 2G 10min./1cycle, period for 60min. each along X, Y, Z axes								
SAFETY & EMC (Note 4)	SAFETY STANDARDS	UL60950-1, TUV EN60950-1 approved								
	WITHSTAND VOLTAGE	I/P-O/P:3KVAC I/P-FG:1.5KVAC O/P-FG:0.5KVAC								
	ISOLATION RESISTANCE	I/P-O/P, I/P-FG, O/P-FG:100M Ohms/500VDC								
	EMI CONDUCTION & RADIATION	Compliance to EN55022 (CISPR22) Class B								
	HARMONIC CURRENT	Compliance to EN61000-3-2,-3								
	EMS IMMUNITY	Compliance to EN61000-4-2,3,4,5,6,8,11; ENV50204, EN55024, light industry level, criteria A								
OTHERS	MTBF	288.1K hrs min. MIL-HDBK-217F (25℃)								
	DIMENSION	PCB:127*76*28mm (L*W*H) with optional CASE:130*84.4*37mm (L*W*H)								
	PACKING	0.24Kg; 63pcs/16Kg/1.35CUFT								
NOTE	1. All parameters NOT specially mentioned are measured at 230VAC input, rated load and 25℃ of ambient temperature. 2. Ripple & noise are measured at 20MHz of bandwidth by using a 12" twisted pair-wire terminated with a 0.1uf & 47uf parallel capacitor. 3. Tolerance : includes set up tolerance, line regulation and load regulation. **4. 10% duty cycle maximum within every second. Average output power should not exceed the rated power, output voltage above 90% DC voltage.** 5. The power supply is considered a component which will be installed into a final equipment. The final equipment must be re-confirmed that it still meets EMC directives.									

File Name:RPT-65-SPEC 2008-03-25

MEAN WELL

65W Triple Output Switching Power Supply

RPT-65 series

■ Mechanical Specification

Case No. 946A Unit:mm

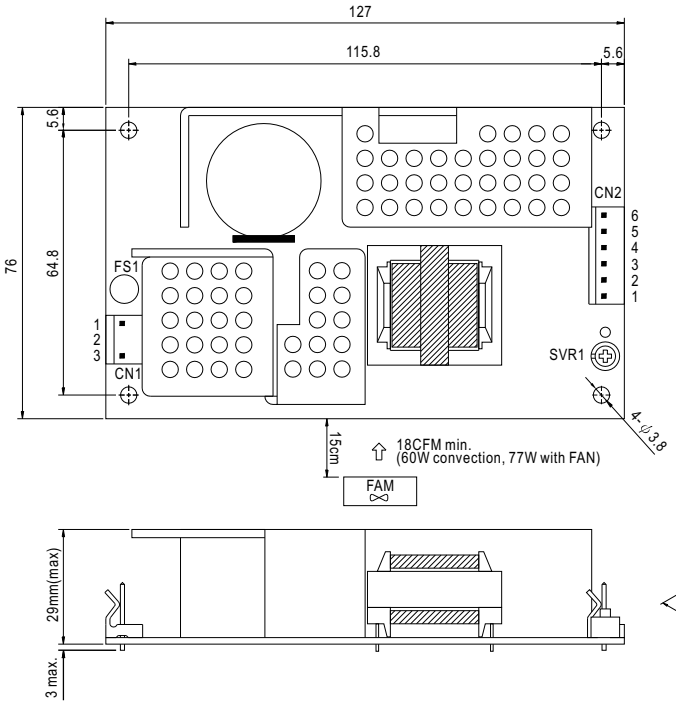

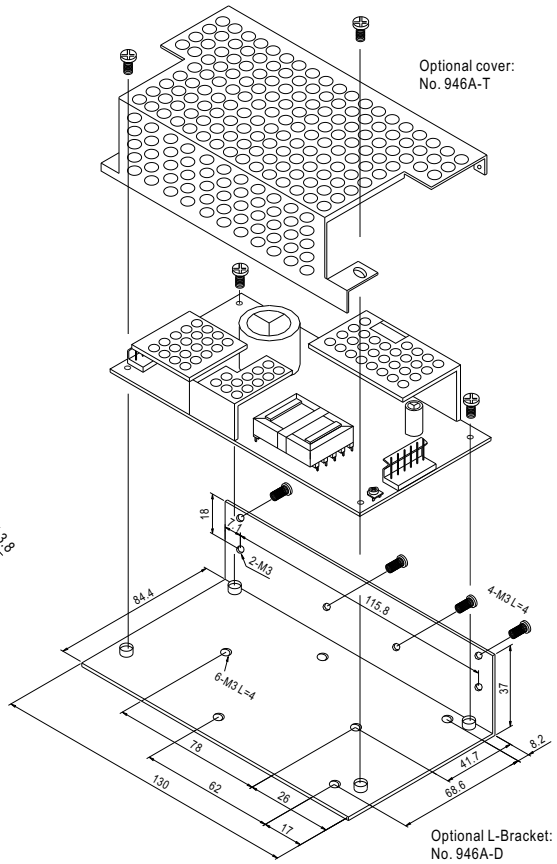

AC Input Connector (CN1) : Molex 5273-03 or equivalent

Pin No.	Assignment	Mating Housing	Terminal
1	AC/L	Molex 5195 or equivalent	Molex 5194 or equivalent
2	No Pin		
3	AC/N		

DC Output Connector (CN2) : Molex 5273-06 or equivalent

Pin No.	Assignment	Mating Housing	Terminal
1,2	V1	Molex 5195 or equivalent	Molex 5194 or equivalent
3,4	GND		
5	V2		
6	V3		

■ Block Diagram

fosc : 65KHz

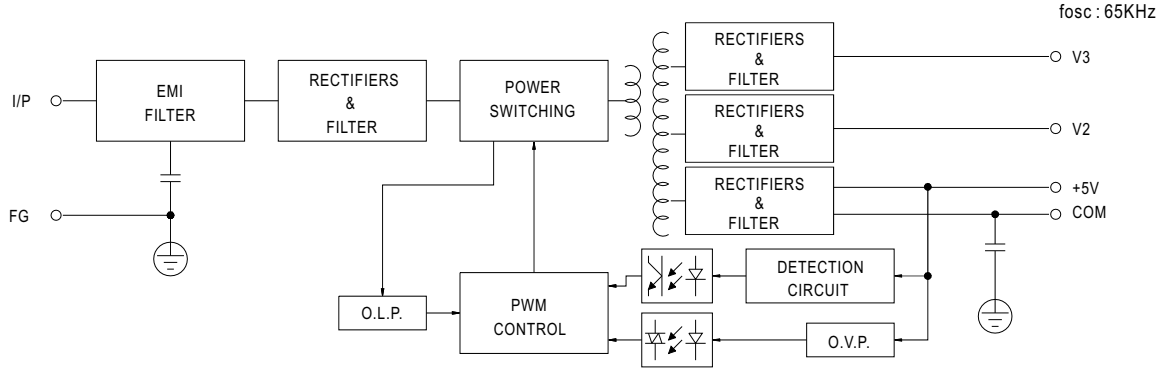

File Name:RPT-65-SPEC 2008-03-25

■ Derating Curve

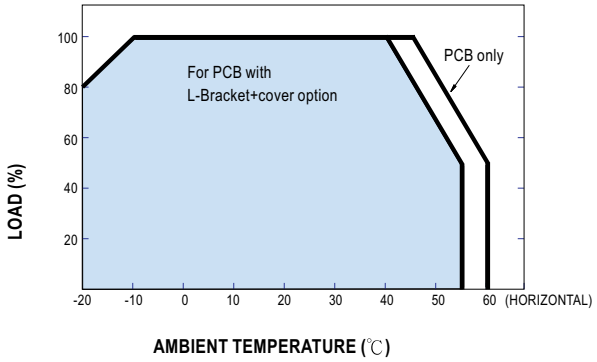

■ Output Derating VS Input Voltage

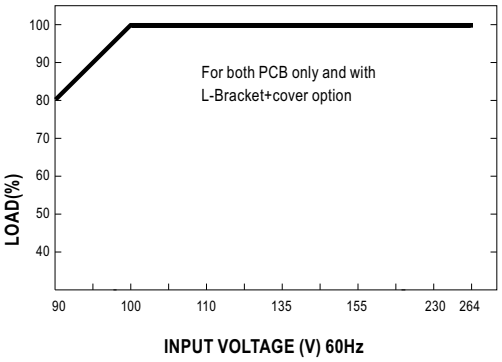

Supporting your great ideas
www.pewatron.com
PEWATRON
a member of the Angst + Pfister Group

PEWATRON
a member of the Angst + Pfister Group

We are here for you. Addresses and Contacts

Sales Switzerland

Postcode 3000 – 9999
Liechtenstein

Matthias Rüegg
Ruhbergstrasse 32
CH-9230 Flawil

Phone + 41 44 877 35 18
Mobile + 41 76 491 66 66
Fax + 41 44 877 35 19

matthias.rueegg@pewatron.com

Postcode 1000 – 2999

Raffael Favaretto
Route d'Oron 124
CH-1673 Promasens

Phone + 41 44 877 35 22
Mobile + 41 76 444 63 14
Fax + 41 44 877 35 23

raffael.favaretto@pewatron.com

Sales Germany

Postcode 60000 – 79999

Dieter Hirthe
Mühlweg 23
D-71554 Weissach i.T.

Phone + 49 719 149 60 58
Mobile + 49 163 762 74 30
Fax + 49 719 193 31 88

dieter.hirthe@pewatron.com

Postcode 10000 – 59999
Postcode 80000 – 99999

Kurt Stritzelberger
Neumarkter Str. 86a
D-81673 Munich

Phone + 49 89 260 38 47
Mobile + 49 171 803 41 35
Fax + 49 89 43 10 91 91

kurt.stritzelberger@pewatron.com

Key Accounts
Aerospace and Defence

Claus Wübbena
Vogelkamp 26
D-26655 Westerstede

Phone + 49 4488 5204 614
Mobile + 49 173 9700 691
Fax + 49 4488 5204 616

claus.wuebbena@pewatron.com

Sales Austria

Kurt Stritzelberger
Neumarkter Str. 86a
D-81673 Munich

Phone + 49 89 260 38 47
Mobile + 49 17 18 03 41 35
Fax + 49 89 43 10 91 91

kurt.stritzelberger@pewatron.com

Sales Other Countries / Product Management

Sensors

Physical Sensors
Data Acquisition

Peter Felder
Phone + 41 44 877 35 05
peter.felder@pewatron.com

Geometrical Sensors

Eric Letsch
Phone + 41 44 877 35 14
eric.letsch@pewatron.com

Power Supplies

DC-DC Converters
Switching Power Supplies
DC-AC Inverters

Sebastiano Leggio
Phone + 41 44 877 35 06
sebastiano.leggio@pewatron.com

E-Components

Current Sensors
Man Machine Interface
Measurement Probes

Sebastiano Leggio
Phone + 41 44 877 35 06
sebastiano.leggio@pewatron.com

PEWATRON AG
Thurgauerstrasse 66
CH-8052 Zurich

Phone + 41 44 877 35 00
Fax + 41 44 877 35 25

www.pewatron.com
info@pewatron.com