MEAN WELL

160W Triple Output Medical Type

# RPT-160 series

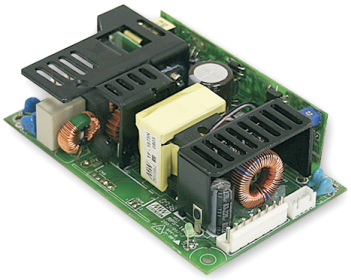

■ Features :

- Universal AC input / Full range
- Built-in active PFC function
- Protections: Short circuit / Overload / Over voltage / Over temperature
- 5"x3" compact size
- Free air convection for 100W and 145W with 20.5 CFM forced air
- With power good and fail signal output
- No load power consumption under 0.75W by PS-ON control (Optional)
- Standby 5V@0.8A with Fan/0.6A without Fan (Optional)
- 3 years warranty

RPT G – 160A

G: With 5Vsb
Blank: Without 5Vsb

## SPECIFICATION

| MODEL | | RPT□-160A | | | RPT□-160B | | | RPT□-160C | | | RPT□-160D | | |
|---|---|---|---|---|---|---|---|---|---|---|---|---|---|
| OUTPUT | OUTPUT NUMBER | CH1 | CH2 | CH3 | CH1 | CH2 | CH3 | CH1 | CH2 | CH3 | CH1 | CH2 | CH3 |
| | DC VOLTAGE | 5V | 12V | -5V | 5V | 12V | -12V | 5V | 15V | -15V | 5V | 12V | 24V |
| | RATED CURRENT (20.5CFM) | 14A | 5.5A | 1A | 14A | 5A | 1A | 14A | 3.6A | 1A | 11A | 5A | 1.2A |
| | CURRENT RANGE (convection) | 0.6 ~ 9A | 0.2 ~ 3.8A | 0.1 ~ 1A | 0.6 ~ 9A | 0.2 ~ 3.4A | 0.1 ~ 0.8A | 0.6 ~ 9A | 0.1 ~ 2.6A | 0.1 ~ 0.8A | 0.3 ~ 8A | 0.2 ~ 2.6A | 0.15 ~ 1A |
| | CURRENT RANGE (20.5CFM) | 0.6 ~ 14A | 0.2 ~ 5.5A | 0.1 ~ 1A | 0.6 ~ 14A | 0.2 ~ 5A | 0.1 ~ 1A | 0.6 ~ 14A | 0.1 ~ 3.6A | 0.1 ~ 1A | 0.3 ~ 11A | 0.2 ~ 5A | 0.15 ~ 1.2A |
| | RATED POWER (convection) Note.7 | 98.6W | | | 98.4W | | | 99W | | | 98.2W | | |
| | RATED POWER (20.5CFM) Note.8 | 145W | | | 146W | | | 143W | | | 147.8W | | |
| | RIPPLE & NOISE (max.) Note.2 | 100mVp-p | 120mVp-p | 120mVp-p | 100mVp-p | 120mVp-p | 120mVp-p | 100mVp-p | 150mVp-p | 150mVp-p | 100mVp-p | 120mVp-p | 200mVp-p |
| | VOLTAGE ADJ. RANGE | CH1:5 ~ 5.5V | | | | | | | | | | | |
| | VOLTAGE TOLERANCE Note.3 | ±2.0% | ±5.0% | -5,+7% | ±2.0% | ±5.0% | -4,+5% | ±2.0% | ±4.0% | +8.0% | ±2.0% | ±5.0% | ±4.0% |
| | LINE REGULATION | ±0.5% | ±1.0% | ±1.0% | ±0.5% | ±1.0% | ±1.0% | ±0.5% | ±1.0% | ±1.0% | ±0.5% | ±1.0% | ±1.0% |
| | LOAD REGULATION | ±1.5% | ±3.0% | -5,+6% | ±1.5% | ±3.0% | -4,+5% | ±2.0% | ±3.0% | ±8.0% | ±1.5% | ±3.0% | -3,+4% |
| | SETUP, RISE TIME | 1200ms, 30ms/230VAC 2500ms, 30ms/115VAC at full load | | | | | | | | | | | |
| | HOLD UP TIME (Typ.) | 16ms/230VAC/115VAC at full load | | | | | | | | | | | |
| INPUT | VOLTAGE RANGE Note.6 | 90 ~ 264VAC 127 ~ 370VDC | | | | | | | | | | | |
| | FREQUENCY RANGE | 47 ~ 63Hz | | | | | | | | | | | |
| | POWER FACTOR (Typ.) | PF>0.93/230VAC PF>0.98/115VAC at full load | | | | | | | | | | | |
| | EFFICIENCY (Typ.) | 84% | | | 84% | | | 83% | | | 83% | | |
| | AC CURRENT (Typ.) | 1.8A/115VAC 0.9A/230VAC | | | | | | | | | | | |
| | INRUSH CURRENT (Typ.) | COLD START 35A/115VAC 70A/230VAC | | | | | | | | | | | |
| | LEAKAGE CURRENT | Earth leakage current <300uA / 264VAC, Patient leakage current <100uA/264VAC | | | | | | | | | | | |
| PROTECTION | OVERLOAD | 105 ~ 135% rated output power | | | | | | | | | | | |
| | | Protection type : Hiccup mode, recovers automatically after fault condition is removed | | | | | | | | | | | |
| | OVER VOLTAGE | CH1: 5.75 ~ 6.75V | | | | | | | | | | | |
| | | Protection type : Shut down o/p voltage, re-power on to recover | | | | | | | | | | | |
| | OVER TEMPERATURE | 105℃(TSW1)detect on heatsink of power transistor | | | | | | | | | | | |
| | | 90℃(TSW2 )detect on heatsink of power transistor | | | | | | | | | | | |
| | | Protection type : (TSW1)Shut down o/p voltage, recovers automatically after temperature goes down | | | | | | | | | | | |
| | | Protection type : (TSW2)Shut down o/p voltage, re-power on to recover | | | | | | | | | | | |
| FUNCTION | 5V STANDBY | 5VSB : 5V@0.6A without Fan, 0.8A with Fan 20.5CFM ; tolerance ± 2%, ripple : 50mVp-p(max.) | | | | | | | | | | | |
| | PS-ON INPUT SIGNAL (OPTIONAL) | Power on: PS-ON = "Hi" or ">2V" ; Power off: PS-ON = "Low" or "<0.5V" | | | | | | | | | | | |
| | POWER GOOD / POWER FAIL | 500ms>PG>10ms PF>1ms | | | | | | | | | | | |
| ENVIRONMENT | WORKING TEMP. | -20 ~ +70℃ (Refer to output load derating curve) | | | | | | | | | | | |
| | WORKING HUMIDITY | 20 ~ 90% RH non-condensing | | | | | | | | | | | |
| | STORAGE TEMP., HUMIDITY | -40 ~ +85℃, 10 ~ 95% RH | | | | | | | | | | | |
| | TEMP. COEFFICIENT | ±0.03%/℃ (0 ~ 50℃) | | | | | | | | | | | |
| | VIBRATION | 10 ~ 500Hz, 2G 10min./1cycle, 60min. each along X, Y, Z axes | | | | | | | | | | | |
| SAFETY & EMC (Note 4) | SAFETY STANDARDS | UL60601-1, TUV EN60601-1 approved | | | | | | | | | | | |
| | WITHSTAND VOLTAGE | I/P-O/P:4KVAC I/P-FG:1.5KVAC O/P-FG:0.5KVAC | | | | | | | | | | | |
| | ISOLATION RESISTANCE | I/P-O/P, I/P-FG, O/P-FG:100M Ohms / 500VDC / 25℃/ 70% RH | | | | | | | | | | | |
| | EMI CONDUCTION & RADIATION | Compliance to EN55011 (CISPR11), EN55022 (CISPR22) Class B | | | | | | | | | | | |
| | HARMONIC CURRENT | Compliance to EN61000-3-2,-3 | | | | | | | | | | | |
| | EMS IMMUNITY | Compliance to EN61000-4-2,3,4,5,6,8,11; ENV50204, EN55024, EN60601-1-2, EN61204-3, medical level, criteria A | | | | | | | | | | | |
| OTHERS | MTBF | 191.4Khrs min. MIL-HDBK-217F (25℃) | | | | | | | | | | | |
| | DIMENSION | 127*76.2*34.6mm (L*W*H) | | | | | | | | | | | |
| | PACKING | 0.33Kg; 36pcs/12.9Kg/0.79CUFT | | | | | | | | | | | |
| NOTE | 1. All parameters NOT specially mentioned are measured at 230VAC input, rated load and 25℃ of ambient temperature.<br>2. Ripple & noise are measured at 20MHz of bandwidth by using a 12" twisted pair-wire terminated with a 0.1uf & 47uf parallel capacitor.<br>3. Tolerance : includes set up tolerance, line regulation and load regulation.<br>4. The power supply is considered a component which will be installed into a final equipment. The final equipment must be re-confirmed that it still meets EMC directives.<br>5. HS1,HS2 & HS3 can not be shorted.<br>6. Derating may be needed under low input voltages. Please check the derating curve for more details.<br>7. The rated power includes 5Vsb @ 0.6A.<br>8. The rated power includes 5Vsb @ 0.8A. | | | | | | | | | | | |

MEAN WELL

160W Triple Output Medical Type

# RPT-160 series

## ■ Mechanical Specification

Unit:mm

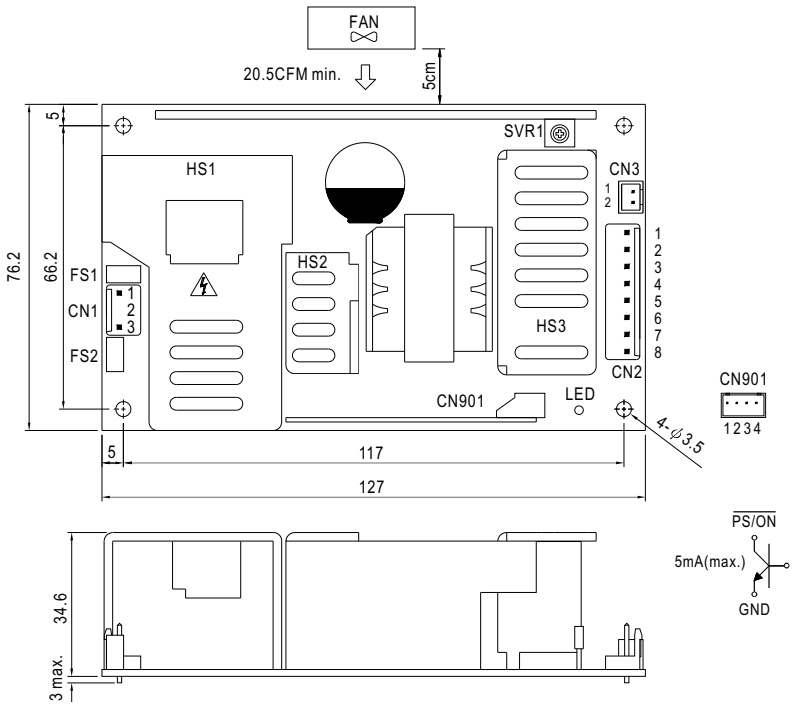





AC Input Connector (CN1) : JST B3P-VH or equivalent

| Pin No. | Assignment | Mating Housing | Terminal |
|---|---|---|---|
| 1 | AC/N | JST VHR or equivalent | JST SVH-21T-P1.1 or equivalent |
| 2 | No Pin | | |
| 3 | AC/L | | |

DC Output Connector (CN2) : JST B8P-VH or equivalent

| Pin No. | Assignment | Mating Housing | Terminal |
|---|---|---|---|
| 1,2,3,4 | COM | JST VHR or equivalent | JST SVH-21T-P1.1 or equivalent |
| 5,6 | CH1 | | |
| 7 | CH2 | | |
| 8 | CH3 | | |

Power Good Connector(CN3):JST B2B-XH or equivalent

| Pin No. | Status | Mating Housing | Terminal |
|---|---|---|---|
| 1 | PG | JST XHP or equivalent | JST SXH-001T-P0.6 or equivalent |
| 2 | GND | | |

5VSB Connector(CN901) : JST B-XH or equivalent

| Pin No. | Assignment | Mating Housing | Terminal |
|---|---|---|---|
| 1 | $\overline{\text{PS/ON}}$ | JST XHP or equivalent | JST SXH-001T or equivalent |
| 2,4 | GND | | |
| 3 | 5VSB | | |

⚠ HS1,HS2,HS3 can not be shorted

## ■ Block Diagram

fosc :100KHz

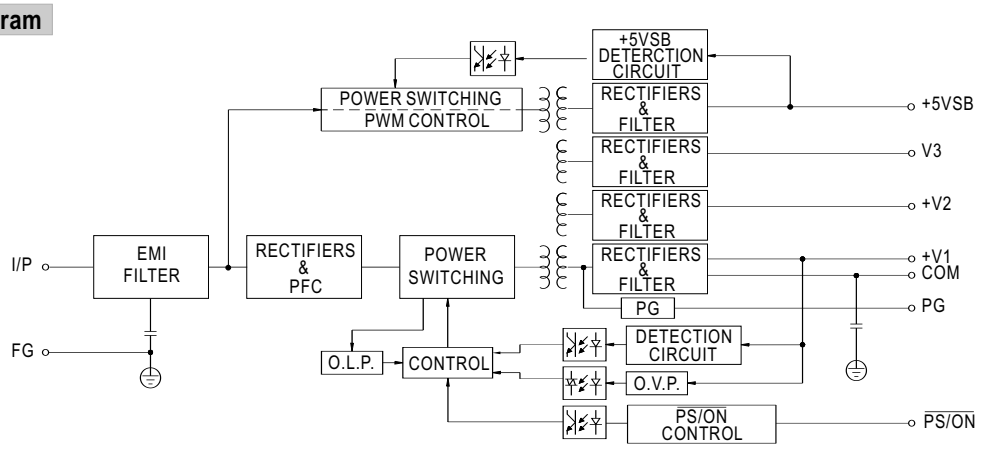


## ■ Derating Curve

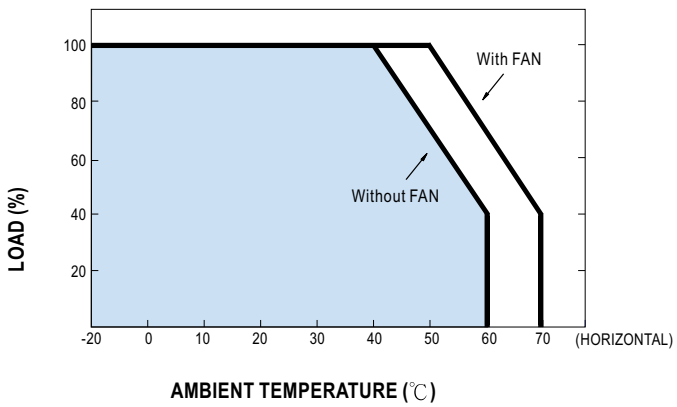


## ■ Output Derating VS Input Voltage

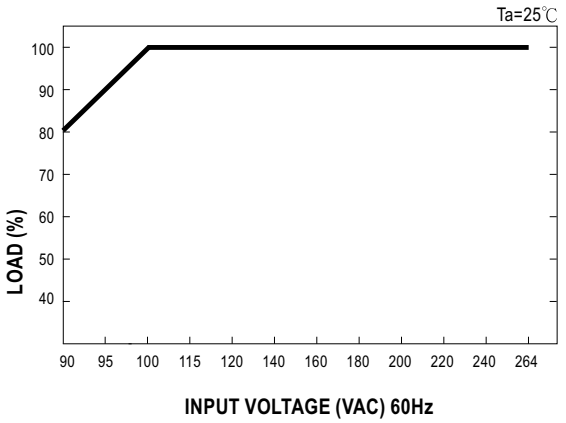




Supporting your great ideas
www.pewatron.com
PEWATRON
a member of the Angst + Pfister Group

PEWATRON
a member of the Angst + Pfister Group

# We are here for you. Addresses and Contacts

## Sales Switzerland

Postcode 3000 – 9999
Liechtenstein

Matthias Rüegg
Ruhbergstrasse 32
CH-9230 Flawil

Phone + 41 44 877 35 18
Mobile + 41 76 491 66 66
Fax + 41 44 877 35 19

matthias.rueegg@pewatron.com

Postcode 1000 – 2999

Raffael Favaretto
Route d'Oron 124
CH-1673 Promasens

Phone + 41 44 877 35 22
Mobile + 41 76 444 63 14
Fax + 41 44 877 35 23

raffael.favaretto@pewatron.com

## Sales Germany

Postcode 60000 – 79999

Dieter Hirthe
Mühlweg 23
D-71554 Weissach i.T.

Phone + 49 719 149 60 58
Mobile + 49 163 762 74 30
Fax + 49 719 193 31 88

dieter.hirthe@pewatron.com

Postcode 10000 – 59999
Postcode 80000 – 99999

Kurt Stritzelberger
Neumarkter Str. 86a
D-81673 Munich

Phone + 49 89 260 38 47
Mobile + 49 171 803 41 35
Fax + 49 89 43 10 91 91

kurt.stritzelberger@pewatron.com

Key Accounts
Aerospace and Defence

Claus Wübbena
Vogelkamp 26
D-26655 Westerstede

Phone + 49 4488 5204 614
Mobile + 49 173 9700 691
Fax + 49 4488 5204 616

claus.wuebbena@pewatron.com

## Sales Austria

Kurt Stritzelberger
Neumarkter Str. 86a
D-81673 Munich

Phone + 49 89 260 38 47
Mobile + 49 17 18 03 41 35
Fax + 49 89 43 10 91 91

kurt.stritzelberger@pewatron.com

## Sales Other Countries / Product Management

### Sensors

Physical Sensors
Data Acquisition

Peter Felder
Phone + 41 44 877 35 05
peter.felder@pewatron.com

Geometrical Sensors

Eric Letsch
Phone + 41 44 877 35 14
eric.letsch@pewatron.com

### Power Supplies

DC-DC Converters
Switching Power Supplies
DC-AC Inverters

Sebastiano Leggio
Phone + 41 44 877 35 06
sebastiano.leggio@pewatron.com

### E-Components

Current Sensors
Man Machine Interface
Measurement Probes

Sebastiano Leggio
Phone + 41 44 877 35 06
sebastiano.leggio@pewatron.com

PEWATRON AG
Thurgauerstrasse 66
CH-8052 Zurich

Phone + 41 44 877 35 00
Fax + 41 44 877 35 25

www.pewatron.com
info@pewatron.com