MEAN WELL

150W Single Output with PFC Function

HRP-150 series

■ Features :

- Universal AC input / Full range
- Built-in active PFC function, PF>0.95
- High efficiency up to 89% (typ.)
- Withstand 300VAC surge input for 5 seconds
- Protections: Short circuit / Overload / Over voltage / Over temperature
- Cooling by free air convection
- Built-in constant current limiting circuit
- 1U low profile 38mm
- Built-in remote sense function
- 5 years warranty

SPECIFICATION

MODEL		HRP-150-3.3	HRP-150-5	HRP-150-7.5	HRP-150-12	HRP-150-15	HRP-150-24	HRP-150-36	HRP-150-48
OUTPUT	DC VOLTAGE	3.3V	5V	7.5V	12V	15V	24V	36V	48V
	RATED CURRENT	30A	26A	20A	13A	10A	6.5A	4.3A	3.3A
	CURRENT RANGE	0 ~ 30A	0 ~ 26A	0 ~ 20A	0 ~ 13A	0 ~ 10A	0 ~ 6.5A	0 ~ 4.3A	0 ~ 3.3A
	RATED POWER	99W	130W	150W	156W	150W	156W	154.8W	158.4W
	RIPPLE & NOISE (max.) Note.2	80mVp-p	80mVp-p	100mVp-p	120mVp-p	150mVp-p	150mVp-p	200mVp-p	240mVp-p
	VOLTAGE ADJ. RANGE	2.8 ~ 3.8V	4.3 ~ 5.8V	6.8 ~ 9V	10.2 ~ 13.8V	13.5 ~ 18V	21.6 ~ 28.8V	28.8 ~ 39.6V	40.8 ~ 55.2V
	VOLTAGE TOLERANCE Note.3	±2.5%	±2.5%	±2.5%	±1.5%	±1.5%	±1.5%	±1.5%	±1.5%
	LINE REGULATION	±0.5%	±0.5%	±0.5%	±0.3%	±0.3%	±0.2%	±0.2%	±0.2%
	LOAD REGULATION	±1.0%	±1.0%	±1.0%	±0.5%	±0.5%	±0.5%	±0.5%	±0.5%
	SETUP, RISE TIME	1000ms, 50ms/230VAC 2500ms, 50ms/115VAC at full load							
	HOLD UP TIME (Typ.)	16ms/230VAC 16ms/115VAC at full load							
INPUT	VOLTAGE RANGE Note.5	85 ~ 264VAC 120 ~ 370VDC							
	FREQUENCY RANGE	47 ~ 63Hz							
	POWER FACTOR (Typ.)	PF>0.95/230VAC PF>0.99/115VAC at full load							
	EFFICIENCY (Typ.)	80%	85%	87%	88%	88%	88%	89%	89%
	AC CURRENT (Typ.)	2.3A/115VAC 1.3A/230VAC							
	INRUSH CURRENT (Typ.)	35A/115VAC 65A/230VAC							
	LEAKAGE CURRENT	<1mA / 240VAC							
PROTECTION	OVERLOAD	105 ~ 135% rated output power							
		Protection type : Constant current limiting, recovers automatically after fault condition is removed							
	OVER VOLTAGE	3.96 ~ 4.62V	6 ~ 7V	9.4 ~ 10.9V	14.4 ~ 16.8V	18.8 ~ 21.8V	30 ~ 34.8V	41.4 ~ 48.6V	57.6 ~ 67.2V
		Protection type : Shut down o/p voltage, re-power on to recover							
	OVER TEMPERATURE	95℃(3.3V ~ 7.5V) ,85℃(12V ~ 48V) (TSW1 : detect on heatsink Q1 of power transistor)							
		105℃(3.3V ~ 7.5V),100℃(12V ~ 48V) (TSW2 : detect on heatsink HS4 of power transistor)							
		Protection type : Shut down o/p voltage, recovers automatically after temperature goes down							
ENVIRONMENT	WORKING TEMP.	-30 ~ +70℃ (Refer to output load derating curve)							
	WORKING HUMIDITY	20 ~ 90% RH non-condensing							
	STORAGE TEMP., HUMIDITY	-40 ~ +85℃, 10 ~ 95% RH							
	TEMP. COEFFICIENT	±0.04%/℃ (0 ~ 50℃)							
	VIBRATION	10 ~ 500Hz, 5G 10min./1cycle, 60min. each along X, Y, Z axes							
SAFETY & EMC (Note 4)	SAFETY STANDARDS	UL60950-1, TUV EN60950-1 approved							
	WITHSTAND VOLTAGE	I/P-O/P:3KVAC I/P-FG:1.5KVAC O/P-FG:0.5KVAC							
	ISOLATION RESISTANCE	I/P-O/P, I/P-FG, O/P-FG:100M Ohms / 500VDC / 25℃/ 70% RH							
	EMI CONDUCTION & RADIATION	Compliance to EN55022 (CISPR22) Class B							
	HARMONIC CURRENT	Compliance to EN61000-3-2,-3							
	EMS IMMUNITY	Compliance to EN61000-4-2,3,4,5,6,8,11; ENV50204, EN55024, EN61000-6-2, heavy industry level, criteria A							
OTHERS	MTBF	238.8K hrs min. MIL-HDBK-217F (25℃)							
	DIMENSION	159*97*38mm (L*W*H)							
	PACKING	0.61Kg; 24pcs/15.6Kg/0.76CUFT							
NOTE	1. All parameters NOT specially mentioned are measured at 230VAC input, rated load and 25℃ of ambient temperature. 2. Ripple & noise are measured at 20MHz of bandwidth by using a 12" twisted pair-wire terminated with a 0.1uf & 47uf parallel capacitor. 3. Tolerance : includes set up tolerance, line regulation and load regulation. 4. The power supply is considered a component which will be installed into a final equipment. The final equipment must be re-confirmed that it still meets EMC directives. 5. Derating may be needed under low input voltages. Please check the derating curve for more details.								

File Name:HRP-150-SPEC 2008-12-10

MEAN WELL

150W Single Output with PFC Function

HRP-150 series

■ Mechanical Specification

Case No.901I Unit:mm

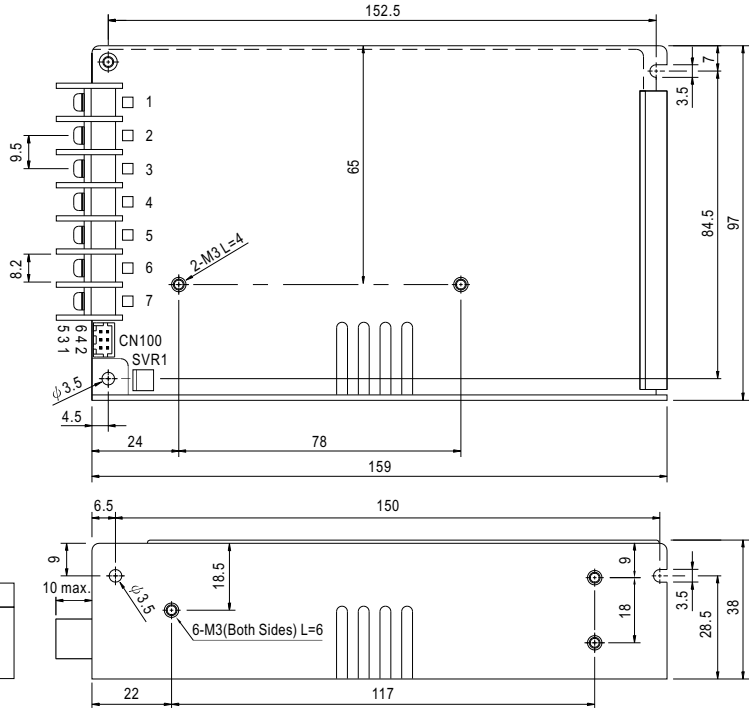

Terminal Pin No. Assignment :

Pin No.	Assignment	Pin No.	Assignment
1	AC/L	4,5	DC OUTPUT -V
2	AC/N	6,7	DC OUTPUT +V
3	FG ⏚		

Connector Pin No. Assignment (CN100) :
HRS DF11-6DP-2DS or equivalent

Pin No.	Assignment	Mating Housing	Terminal
1	-S	HRS DF11-6DS or equivalent	HRS DF11-**SC or equivalent
2	+S		
3~6	NC		

■ Block Diagram

fosc :100KHz(3.3~7.5V)
70KHz(12~48V)

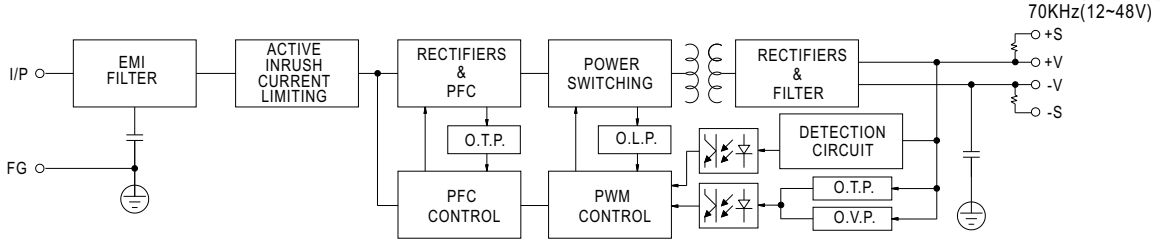

■ Derating Curve

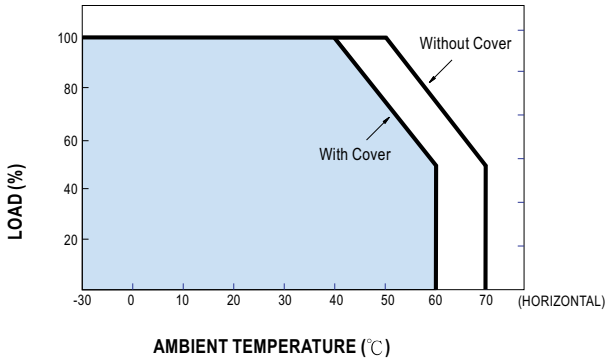

■ Output Derating VS Input Voltage

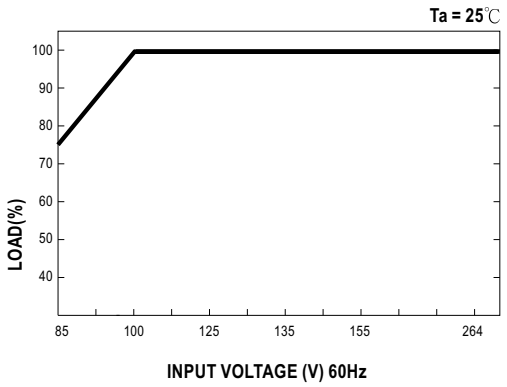

File Name:HRP-150-SPEC 2008-12-10

MEAN WELL

150W Single Output with PFC Function

HRPG-150 series

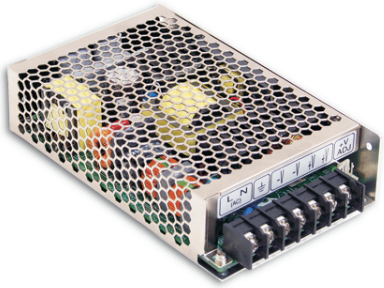

■ Features :

- Universal AC input / Full range
- Built-in active PFC function, PF>0.95
- High efficiency up to 88% (typ.)
- Withstand 300VAC surge input for 5 seconds
- Protections: Short circuit / Overload / Over voltage / Over temperature
- Cooling by free air convection
- Built-in constant current limiting circuit
- 1U low profile 38mm
- Built-in remote ON-OFF control
- Stand by 5V@0.3A
- Built-in remote sense function
- No load power consumption<0.5W
- 5 years warranty

SPECIFICATION

MODEL		HRPG-150-3.3	HRPG-150-5	HRPG-150-7.5	HRPG-150-12	HRPG-150-15	HRPG-150-24	HRPG-150-36	HRPG-150-48
OUTPUT	DC VOLTAGE	3.3V	5V	7.5V	12V	15V	24V	36V	48V
	RATED CURRENT	30A	26A	20A	13A	10A	6.5A	4.3A	3.3A
	CURRENT RANGE	0 ~ 30A	0 ~ 26A	0 ~ 20A	0 ~ 13A	0 ~ 10A	0 ~ 6.5A	0 ~ 4.3A	0 ~ 3.3A
	RATED POWER	99W	130W	150W	156W	150W	156W	154.8W	158.4W
	RIPPLE & NOISE (max.) Note.2	80mVp-p	80mVp-p	100mVp-p	120mVp-p	150mVp-p	150mVp-p	200mVp-p	240mVp-p
	VOLTAGE ADJ. RANGE	2.8 ~ 3.8V	4.3 ~ 5.8V	6.8 ~ 9V	10.2 ~ 13.8V	13.5 ~ 18V	21.6 ~ 28.8V	28.8 ~ 39.6V	40.8 ~ 55.2V
	VOLTAGE TOLERANCE Note.3	±2.5%	±2.5%	±2.5%	±1.5%	±1.5%	±1.5%	±1.5%	±1.5%
	LINE REGULATION	±0.5%	±0.5%	±0.5%	±0.3%	±0.3%	±0.2%	±0.2%	±0.2%
	LOAD REGULATION	±1.0%	±1.0%	±1.0%	±0.5%	±0.5%	±0.5%	±0.5%	±0.5%
	SETUP, RISE TIME	1000ms, 50ms/230VAC 2500ms, 50ms/115VAC at full load							
	HOLD UP TIME (Typ.)	16ms/230VAC 16ms/115VAC at full load							
INPUT	VOLTAGE RANGE Note.5	85 ~ 264VAC 120 ~ 370VDC							
	FREQUENCY RANGE	47 ~ 63Hz							
	POWER FACTOR (Typ.)	PF>0.95/230VAC PF>0.99/115VAC at full load							
	EFFICIENCY (Typ.)	80%	84%	86%	87%	87%	87%	88%	88%
	AC CURRENT (Typ.)	2.3A/115VAC 1.3A/230VAC							
	INRUSH CURRENT (Typ.)	35A/115VAC 65A/230VAC							
	LEAKAGE CURRENT	<1mA / 240VAC							
PROTECTION	OVERLOAD	105 ~ 135% rated output power							
		Protection type : Constant current limiting, recovers automatically after fault condition is removed							
	OVER VOLTAGE	3.96 ~ 4.62V	6 ~ 7V	9.4 ~ 10.9V	14.4 ~ 16.8V	18.8 ~ 21.8V	30 ~ 34.8V	41.4 ~ 48.6V	57.6 ~ 67.2V
		Protection type : Shut down o/p voltage, re-power on to recover							
	OVER TEMPERATURE	95℃(3.3V ~ 7.5V) ,85℃(12V ~ 48V) (TSW1 : detect on heatsink Q1 of power transistor)							
		105℃(3.3V ~ 7.5V),100℃(12V ~ 48V) (TSW2 : detect on heatsink HS4 of power transistor)							
		Protection type : Shut down o/p voltage, recovers automatically after temperature goes down							
FUNCTION	REMOTE CONTROL	Short power OFF ; Open power ON							
ENVIRONMENT	WORKING TEMP.	-30 ~ +70℃ (Refer to output load derating curve)							
	WORKING HUMIDITY	20 ~ 90% RH non-condensing							
	STORAGE TEMP., HUMIDITY	-40 ~ +85℃, 10 ~ 95% RH							
	TEMP. COEFFICIENT	±0.04%/℃ (0 ~ 50℃)							
	VIBRATION	10 ~ 500Hz, 5G 10min./1cycle, 60min. each along X, Y, Z axes							
SAFETY & EMC (Note 4)	SAFETY STANDARDS	UL60950-1, TUV EN60950-1 approved							
	WITHSTAND VOLTAGE	I/P-O/P:3KVAC I/P-FG:1.5KVAC O/P-FG:0.5KVAC							
	ISOLATION RESISTANCE	I/P-O/P, I/P-FG, O/P-FG:100M Ohms / 500VDC / 25℃/ 70% RH							
	EMI CONDUCTION & RADIATION	Compliance to EN55022 (CISPR22) Class B							
	HARMONIC CURRENT	Compliance to EN61000-3-2,-3							
	EMS IMMUNITY	Compliance to EN61000-4-2,3,4,5,6,8,11, ENV50204, EN55024, EN61000-6-2, heavy industry level, criteria A							
OTHERS	MTBF	213.4K hrs min. MIL-HDBK-217F (25℃)							
	DIMENSION	159*97*38mm (L*W*H)							
	PACKING	0.63Kg; 24pcs/16Kg/0.76CUFT							

NOTE

1. All parameters NOT specially mentioned are measured at 230VAC input, rated load and 25℃ of ambient temperature.
2. Ripple & noise are measured at 20MHz of bandwidth by using a 12" twisted pair-wire terminated with a 0.1uf & 47uf parallel capacitor.
3. Tolerance : includes set up tolerance, line regulation and load regulation.
4. The power supply is considered a component which will be installed into a final equipment. The final equipment must be re-confirmed that it still meets EMC directives.
5. Derating may be needed under low input voltages. Please check the derating curve for more details.

File Name:HRPG-150-SPEC 2008-12-10

MEAN WELL

150W Single Output with PFC Function

HRPG-150 series

Mechanical Specification

Case No.901I Unit:mm

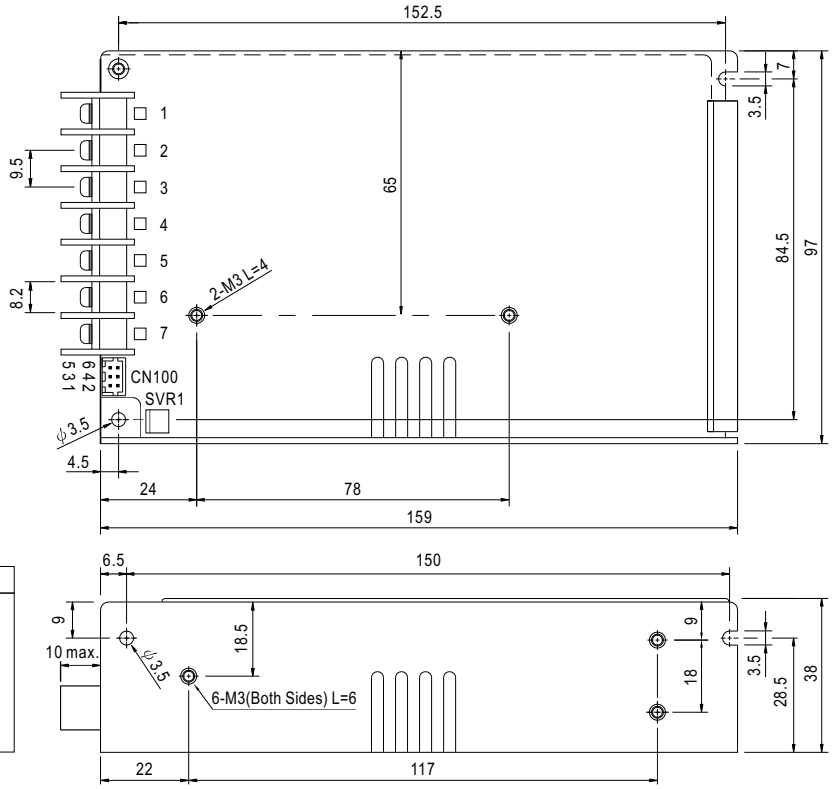

Terminal Pin No. Assignment

Pin No.	Assignment	Pin No.	Assignment
1	AC/L	4,5	DC OUTPUT -V
2	AC/N	6,7	DC OUTPUT +V
3	FG ⏚		

Connector Pin No. Assignment (CN100) :
HRS DF11-6DP-2DS or equivalent

Pin No.	Assignment	Mating Housing	Terminal
1	-S	HRS DF11-6DS or equivalent	HRS DF11-**SC or equivalent
2	+S		
3	AUXG		
4	AUX		
5	RC-		
6	RC+		

Block Diagram

fosc :100KHz(3.3~7.5V)
70KHz(12~48V)

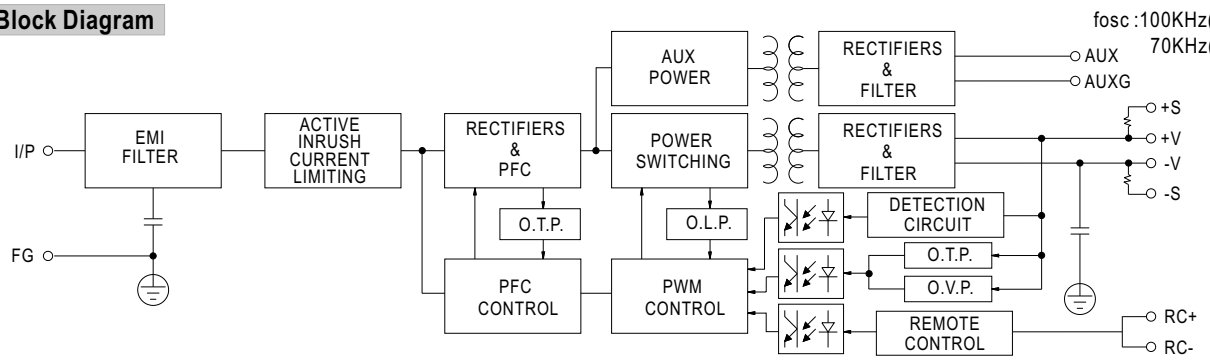

Derating Curve

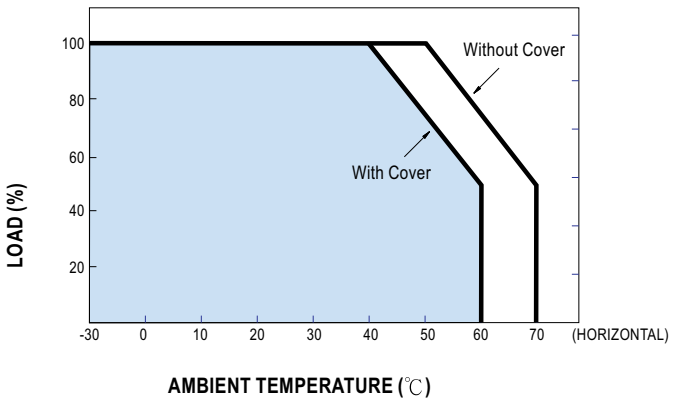

Output Derating VS Input Voltage

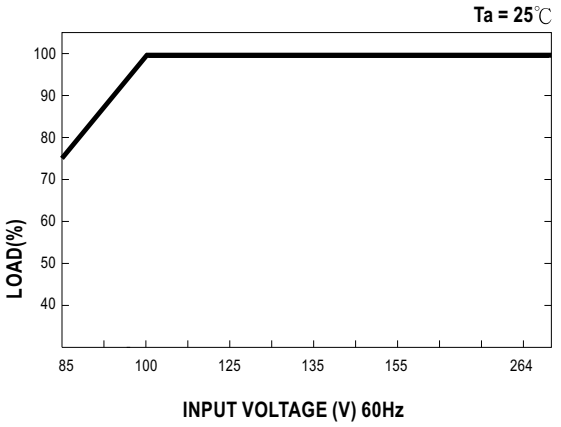

Supporting your great ideas www.pewatron.com PEWATRON a member of the Angst + Pfister Group

■ Function Description of CN100

Pin No.	Function	Description
1	-S	Negative sensing. The -S signal should be connected to the negative terminal of the load. The -S and +S leads should be twisted in pair to minimize noise pick-up effect. The maximum line drop compensation is 0.5V.
2	+S	Positive sensing. The +S signal should be connected to the positive terminal of the load. The +S and -S leads should be twisted in pair to minimize noise pick-up effect. The maximum line drop compensation is 0.5V.
3	AUXG	Auxiliary voltage output ground. The signal return is isolated from the output terminals (+V & -V).
4	AUX	Auxiliary voltage output, 4.6~5.25V, referenced to pin 3(AUXG). The maximum load current is 0.3A. This output has the built-in oring diodes and is not controlled by the "remote ON/OFF control".
5	-RC	Remote control ground.
6	+RC	Turns the output on and off by electrical or dry contact between pin 5 (RC-). Short: Power OFF, Open: Power ON.

■ Function Manual

1.Remote Control

The PSU can be turned ON/OFF by using the "Remote ON/OFF" function

Between RC-(pin5) and RC+(pin6)	Output Status
SW ON (Short)	OFF
SW OFF (Open)	ON

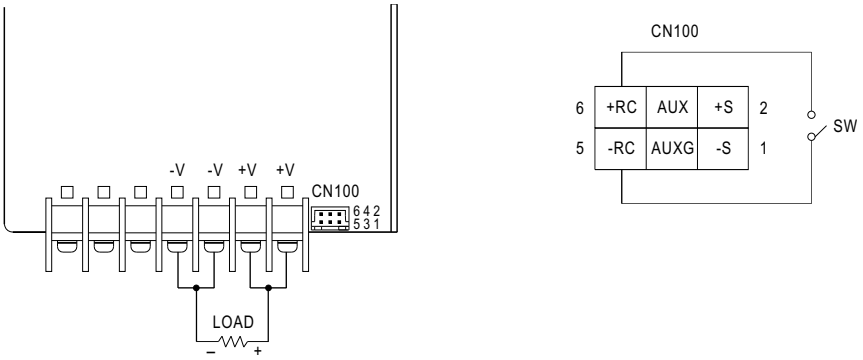

Fig 1.1

2.Remote Sense

The remote sensing compensates voltage drop on the load wiring up to 0.5V.

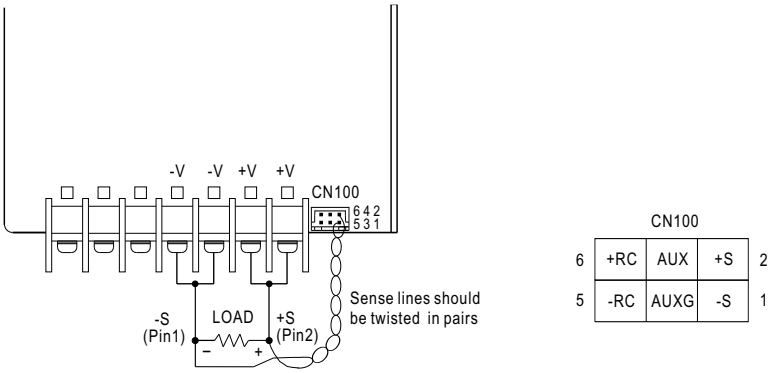

Fig 2.1

PEWATRON
a member of the Angst + Pfister Group

We are here for you. Addresses and Contacts

Sales Switzerland

Postcode 3000 – 9999
Liechtenstein

Matthias Rüegg
Ruhbergstrasse 32
CH-9230 Flawil

Phone + 41 44 877 35 18
Mobile + 41 76 491 66 66
Fax + 41 44 877 35 19

matthias.rueegg@pewatron.com

Postcode 1000 – 2999

Raffael Favaretto
Route d'Oron 124
CH-1673 Promasens

Phone + 41 44 877 35 22
Mobile + 41 76 444 63 14
Fax + 41 44 877 35 23

raffael.favaretto@pewatron.com

Sales Germany

Postcode 60000 – 79999

Dieter Hirthe
Mühlweg 23
D-71554 Weissach i.T.

Phone + 49 719 149 60 58
Mobile + 49 163 762 74 30
Fax + 49 719 193 31 88

dieter.hirthe@pewatron.com

Postcode 10000 – 59999
Postcode 80000 – 99999

Kurt Stritzelberger
Neumarkter Str. 86a
D-81673 Munich

Phone + 49 89 260 38 47
Mobile + 49 171 803 41 35
Fax + 49 89 43 10 91 91

kurt.stritzelberger@pewatron.com

Key Accounts
Aerospace and Defence

Claus Wübbena
Vogelkamp 26
D-26655 Westerstede

Phone + 49 4488 5204 614
Mobile + 49 173 9700 691
Fax + 49 4488 5204 616

claus.wuebbena@pewatron.com

Sales Austria

Kurt Stritzelberger
Neumarkter Str. 86a
D-81673 Munich

Phone + 49 89 260 38 47
Mobile + 49 17 18 03 41 35
Fax + 49 89 43 10 91 91

kurt.stritzelberger@pewatron.com

Sales Other Countries / Product Management

Sensors

Physical Sensors
Data Acquisition

Peter Felder
Phone + 41 44 877 35 05
peter.felder@pewatron.com

Geometrical Sensors

Eric Letsch
Phone + 41 44 877 35 14
eric.letsch@pewatron.com

Power Supplies

DC-DC Converters
Switching Power Supplies
DC-AC Inverters

Sebastiano Leggio
Phone + 41 44 877 35 06
sebastiano.leggio@pewatron.com

E-Components

Current Sensors
Man Machine Interface
Measurement Probes

Sebastiano Leggio
Phone + 41 44 877 35 06
sebastiano.leggio@pewatron.com

PEWATRON AG
Thurgauerstrasse 66
CH-8052 Zurich

Phone + 41 44 877 35 00
Fax + 41 44 877 35 25

www.pewatron.com
info@pewatron.com