MEAN WELL

75W Single Output with PFC Function

ELP-75 series

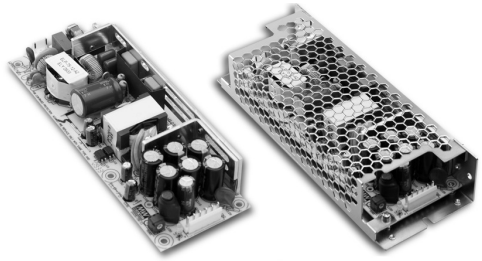

■ Features :

- Universal AC input / Full range
- Built-in active PFC function, PF>0.95
- High efficiency up to 90%
- **Optional L-Bracket and cover (ELP-75-x-C, x=3.3,5,12,15,24,36,48)**
- Protections: Short circuit / Overload / Over voltage
- Cooling by free air convection
- 1U low profile
- LED indicator for power on
- No load power consumption<0.5W
- 3 years warranty

SPECIFICATION

MODEL		ELP-75-3.3	ELP-75-5	ELP-75-12	ELP-75-15	ELP-75-24	ELP-75-36	ELP-75-48
OUTPUT	DC VOLTAGE	3.3V	5V	12V	15V	24V	36V	48V
	RATED CURRENT	15A	15A	6.25A	5A	3.15A	2.1A	1.6A
	CURRENT RANGE	0 ~ 15A	0 ~ 15A	0 ~ 6.25A	0 ~ 5A	0 ~ 3.15A	0 ~ 2.1A	0 ~ 1.6A
	RATED POWER	49.5W	75W	75W	75W	75.6W	75.6W	76.8W
	RIPPLE & NOISE (max.) Note.2	80mVp-p	80mVp-p	120mVp-p	150mVp-p	240mVp-p	280mVp-p	300mVp-p
	VOLTAGE ADJ. RANGE	3 ~ 3.6V	4.75 ~ 5.5V	10.8 ~ 13.2V	13.5 ~ 16.5V	21.6 ~ 26.4V	32.4 ~ 39.6V	43.2 ~ 52.8V
	VOLTAGE TOLERANCE Note.3	±3.0%	±2.0%	±2.0%	±2.0%	±1.0%	±1.0%	±1.0%
	LINE REGULATION	±0.5%	±0.5%	±0.5%	±0.5%	±0.5%	±0.5%	±0.5%
	LOAD REGULATION	±2.0%	±1.5%	±1.0%	±1.0%	±1.0%	±1.0%	±1.0%
	SETUP, RISE TIME	2500ms, 50ms/230VAC 2500ms, 50ms/115VAC at full load						
	HOLD UP TIME (Typ.)	20ms/230VAC 20ms/115VAC at full load						
INPUT	VOLTAGE RANGE Note.6	90 ~ 264VAC 127 ~ 370VDC						
	FREQUENCY RANGE	47 ~ 63Hz						
	POWER FACTOR (Typ.) Note.5	PF>0.95/230VAC PF>0.98/115VAC at full load						
	EFFICIENCY (Typ.)	80%	82%	89%	90%	90%	90%	90%
	AC CURRENT (Typ.)	1.8A/115VAC 1 A/230VAC						
	INRUSH CURRENT (Typ.)	COLD START 60A/230VAC						
	LEAKAGE CURRENT	<1mA/240VAC						
PROTECTION	OVER LOAD	105 ~ 150% rated output power						
		Protection type : Hiccup mode, recovers automatically after fault condition is removed						
	OVER VOLTAGE	3.7 ~ 4.45V	5.6 ~ 6.75V	13.8 ~ 16.2V	17.25 ~ 20.25V	27.6 ~ 32.4V	39.7 ~ 46.8V	53.3 ~ 64.8V
		Protection type : Shut down o/p voltage, re-power on to recover						
ENVIRONMENT	WORKING TEMP.	-30 ~ +70℃ (Refer to output load derating curve)						
	WORKING HUMIDITY	20 ~ 90% RH non-condensing						
	STORAGE TEMP., HUMIDITY	-40 ~ +85℃, 10 ~ 95% RH						
	TEMP. COEFFICIENT	±0.03%/℃ (0 ~ 50℃)						
	VIBRATION	10 ~ 500Hz, 2G 10min./1cycle, period for 60min. each along X, Y, Z axes						
SAFETY & EMC (Note 4)	SAFETY STANDARDS	UL60950-1, TUV EN60950-1 approved						
	WITHSTAND VOLTAGE	I/P-O/P:3KVAC I/P-FG:1.5KVAC O/P-FG:0.5KVAC						
	ISOLATION RESISTANCE	I/P-O/P, I/P-FG, O/P-FG:100M Ohms / 500VDC/ 500VDC / 25℃/ 70% RH						
	EMI CONDUCTION & RADIATION	Compliance to EN55022 (CISPR22) Class B						
	HARMONIC CURRENT	Compliance to EN61000-3-2,-3						
	EMS IMMUNITY	Compliance to EN61000-4-2,3,4,5,6,8,11; ENV50204, EN55024, heavy industry level, criteria A						
OTHERS	MTBF	345.3Khrs min. MIL-HDBK-217F (25℃)						
	DIMENSION	PCB:175*60*27mm (L*W*H) with optional CASE:195*68.5*33mm (L*W*H)						
	PACKING	PCB:0.25Kg; 48pcs/13Kg/0.85CUFT with optional CASE:0.54Kg; 25pcs/14.5Kg/0.59CUFT						
NOTE	1. All parameters NOT specially mentioned are measured at 230VAC input, rated load and 25℃ of ambient temperature. 2. Ripple & noise are measured at 20MHz of bandwidth by using a 12" twisted pair-wire terminated with a 0.1uf & 47uf parallel capacitor. 3. Tolerance : includes set up tolerance, line regulation and load regulation. 4. The power supply is considered a component which will be installed into a final equipment. The final equipment must be re-confirmed that it still meets EMC directives. 5. 3.3V PF>0.92/230VAC, others PF>0.95/230VAC. 6. Derating may be needed under low input voltage. Please check the derating curve for more details.							

File Name:ELP-75-SPEC 2010-08-10

MEAN WELL

75W Single Output with PFC Function

ELP-75 series

■ Mechanical Specification

Unit:mm

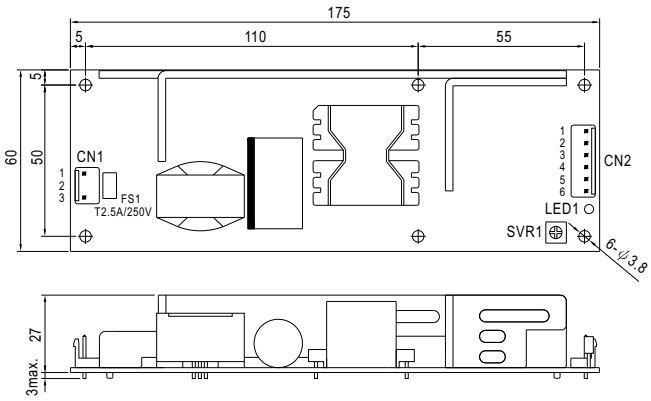

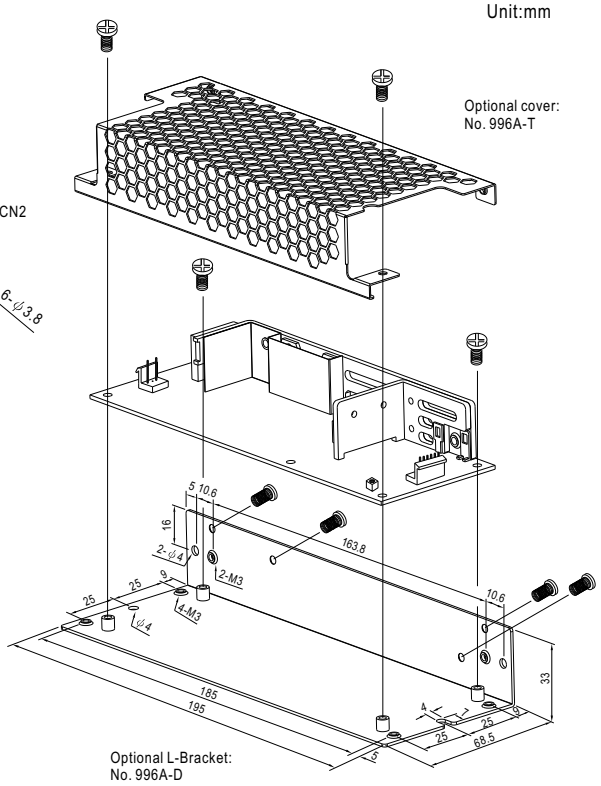

AC Input Connector (CN1) : JST B3P-VH or equivalent

Pin No.	Assignment	Mating Housing	Terminal
1	AC/L	JST VHR or equivalent	JST SVH-21T-P1.1 or equivalent
2	No Pin		
3	AC/N		

DC Output Connector (CN2) : JST B6P-VH or equivalent

Pin No.	Assignment	Mating Housing	Terminal
1,2,3	-V	JST VHR or equivalent	JST SVH-21T-P1.1 or equivalent
4,5,6	+V		

■ Block Diagram

fosc : 100KHz

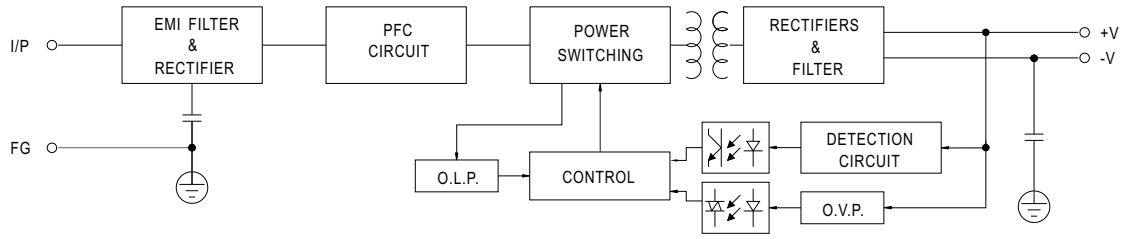

■ Output Derating

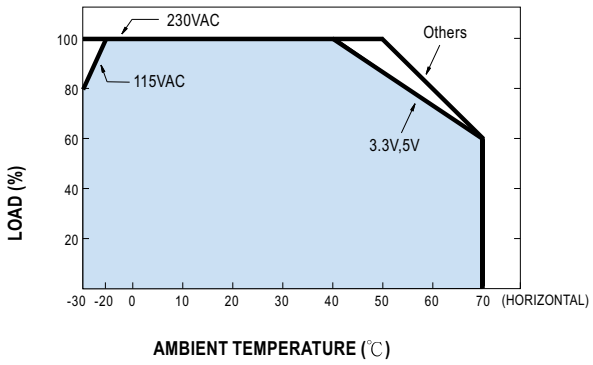

■ Output Derating VS Input Voltage

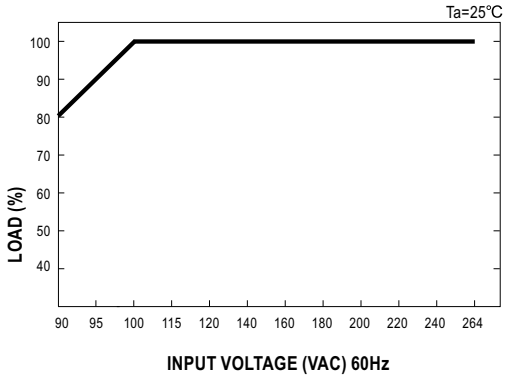

File Name:ELP-75-SPEC 2010-08-10

PEWATRON
a member of the Angst + Pfister Group

We are here for you. Addresses and Contacts

Sales Switzerland

Postcode 3000 – 9999
Liechtenstein

Matthias Rüegg
Ruhbergstrasse 32
CH-9230 Flawil

Phone + 41 44 877 35 18
Mobile + 41 76 491 66 66
Fax + 41 44 877 35 19

matthias.rueegg@pewatron.com

Postcode 1000 – 2999

Raffael Favaretto
Route d'Oron 124
CH-1673 Promasens

Phone + 41 44 877 35 22
Mobile + 41 76 444 63 14
Fax + 41 44 877 35 23

raffael.favaretto@pewatron.com

Sales Germany

Postcode 60000 – 79999

Dieter Hirthe
Mühlweg 23
D-71554 Weissach i.T.

Phone + 49 719 149 60 58
Mobile + 49 163 762 74 30
Fax + 49 719 193 31 88

dieter.hirthe@pewatron.com

Postcode 10000 – 59999
Postcode 80000 – 99999

Kurt Stritzelberger
Neumarkter Str. 86a
D-81673 Munich

Phone + 49 89 260 38 47
Mobile + 49 171 803 41 35
Fax + 49 89 43 10 91 91

kurt.stritzelberger@pewatron.com

Key Accounts
Aerospace and Defence

Claus Wübbena
Vogelkamp 26
D-26655 Westerstede

Phone + 49 4488 5204 614
Mobile + 49 173 9700 691
Fax + 49 4488 5204 616

claus.wuebbena@pewatron.com

Sales Austria

Kurt Stritzelberger
Neumarkter Str. 86a
D-81673 Munich

Phone + 49 89 260 38 47
Mobile + 49 17 18 03 41 35
Fax + 49 89 43 10 91 91

kurt.stritzelberger@pewatron.com

Sales Other Countries / Product Management

Sensors

Physical Sensors
Data Acquisition

Peter Felder
Phone + 41 44 877 35 05
peter.felder@pewatron.com

Geometrical Sensors

Eric Letsch
Phone + 41 44 877 35 14
eric.letsch@pewatron.com

Power Supplies

DC-DC Converters
Switching Power Supplies
DC-AC Inverters

Sebastiano Leggio
Phone + 41 44 877 35 06
sebastiano.leggio@pewatron.com

E-Components

Current Sensors
Man Machine Interface
Measurement Probes

Sebastiano Leggio
Phone + 41 44 877 35 06
sebastiano.leggio@pewatron.com

PEWATRON AG
Thurgauerstrasse 66
CH-8052 Zurich

Phone + 41 44 877 35 00
Fax + 41 44 877 35 25

www.pewatron.com
info@pewatron.com