MEAN WELL

120W Single Output Industrial DIN RAIL with PFC Function

SDR-120 series

Features :

- High efficiency 91% and low power dissipation
- 150% peak load capability
- Built-in active PFC function, PF>0.93
- Protections: Short circuit / Overload / Over voltage / Over temperature
- Cooling by free air convection
- Can be installed on DIN rail TS-35/7.5 or 15
- UL 508 (industrial control equipment) approved
- EN61000-6-2(EN50082-2) industrial immunity level
- Built-in DC OK relay contact
- 100% full load burn-in test
- 3 years warranty

SPECIFICATION

MODEL		SDR-120-12	SDR-120-24	SDR-120-48
OUTPUT	DC VOLTAGE	12V	24V	48V
	RATED CURRENT	10A	5A	2.5A
	CURRENT RANGE	0 ~ 10A	0 ~ 5A	0 ~ 2.5A
	RATED POWER	120W	120W	120W
	PEAK CURRENT	15A	7.5A	3.75A
	PEAK POWER Note.6	180W (3 sec.)		
	RIPPLE & NOISE (max.) Note.2	100mVp-p	100mVp-p	120mVp-p
	VOLTAGE ADJ. RANGE	12 ~ 14V	24 ~ 28V	48 ~ 55V
	VOLTAGE TOLERANCE Note.3	±1.0%	±1.0%	±1.0%
	LINE REGULATION	±0.5%	±0.5%	±0.5%
	LOAD REGULATION	±1.0%	±1.0%	±1.0%
	SETUP, RISE TIME	1500ms, 60ms/230VAC 3000ms, 60ms/115VAC at full load		
	HOLD UP TIME (Typ.)	20ms/230VAC 20ms/115VAC at full load		
INPUT	VOLTAGE RANGE Note.7	88 ~ 264VAC 124 ~ 370VDC		
	FREQUENCY RANGE	47 ~ 63Hz		
	POWER FACTOR (Typ.)	0.93/230VAC 0.96/115VAC at full load		
	EFFICIENCY (Typ.)	89%	91%	90.5%
	AC CURRENT (Typ.)	1.4A/115VAC 0.7A/230VAC		
	INRUSH CURRENT (Typ.)	35A/115VAC 70A/230VAC		
	LEAKAGE CURRENT	<1mA / 240VAC		
PROTECTION	OVERLOAD	Normally works within 110 ~ 150% rated output power for more than 3 seconds and then shut down o/p voltage		
		>150% rated power, constant current limiting with auto-recovery within 3 seconds and shut down o/p voltage after 3 seconds		
	OVER VOLTAGE	14 ~ 17V	29 ~ 33V	56 ~ 65V
		Protection type : Shut down o/p voltage, re-power on to recover		
	OVER TEMPERATURE	95℃±5℃ (TSW : detect on heatsink of power switch)		
		Protection type : Shut down o/p voltage, recovers automatically after temperature goes down		
FUNCTION	DC OK REALY CONTACT RATINGS (max.)	60Vdc/0.3A, 30Vdc/1A, 30Vac/0.5A resistive load		
ENVIRONMENT	WORKING TEMP.	-25 ~ +70℃ (Refer to "Derating Curve")		
	WORKING HUMIDITY	20 ~ 95% RH non-condensing		
	STORAGE TEMP., HUMIDITY	-40 ~ +85℃, 10 ~ 95% RH		
	TEMP. COEFFICIENT	±0.03%/℃ (0 ~ 50℃)		
	VIBRATION	Component:10 ~ 500Hz, 2G 10min./1cycle, 60min. each along X, Y, Z axes; Mounting: Compliance to IEC60068-2-6		
SAFETY & EMC (Note 4)	SAFETY STANDARDS	UL508, TUV EN60950-1 approved		
	WITHSTAND VOLTAGE	I/P-O/P:3KVAC I/P-FG:1.5KVAC O/P-FG:0.5KVAC O/P-DC OK:0.5KVAC		
	ISOLATION RESISTANCE	I/P-O/P, I/P-FG, O/P-FG:>100M Ohms / 500VDC / 25℃/ 70% RH		
	EMC EMISSION	Compliance to EN55022 (CISPR22) Class B, EN61000-3-2,-3		
	EMC IMMUNITY	Compliance to EN61000-4-2,3,4,5,6,8,11, EN55024, EN61000-6-2 (EN50082-2), EN61204-3, heavy industry level, criteria A, SEMI F47, GL approved		
OTHERS	MTBF	289.9Khrs min. MIL-HDBK-217F (25℃)		
	DIMENSION	40*125.2*113.5mm (W*H*D)		
	PACKING	0.67Kg; 20pcs/14.4Kg/1.16CUFT		

NOTE

1. All parameters NOT specially mentioned are measured at 230VAC input, rated load and 25℃ of ambient temperature.
2. Ripple & noise are measured at 20MHz of bandwidth by using a 12" twisted pair-wire terminated with a 0.1uf & 47uf parallel capacitor.
3. Tolerance : includes set up tolerance, line regulation and load regulation.
4. The power supply is considered a component which will be installed into a final equipment. The final equipment must be re-confirmed that it still meets EMC directives.
5. Installation clearances : 40mm on top, 20mm on the bottom, 5mm on the left and right side are recommended when loaded permanently with full power. In case the adjacent device is a heat source, 15mm clearance is recommended.
6. 3 seconds max., please refer to peak loading curves.
7. Derating may be needed under low input voltage. Please check the derating curve for more details.

Supporting your great ideas www.pewatron.com PEWATRON a member of the Angst + Pfister Group

MEAN WELL

120W Single Output Industrial DIN RAIL with PFC Function

SDR-120 series

■ Mechanical Specification

Case No.992A Unit:mm

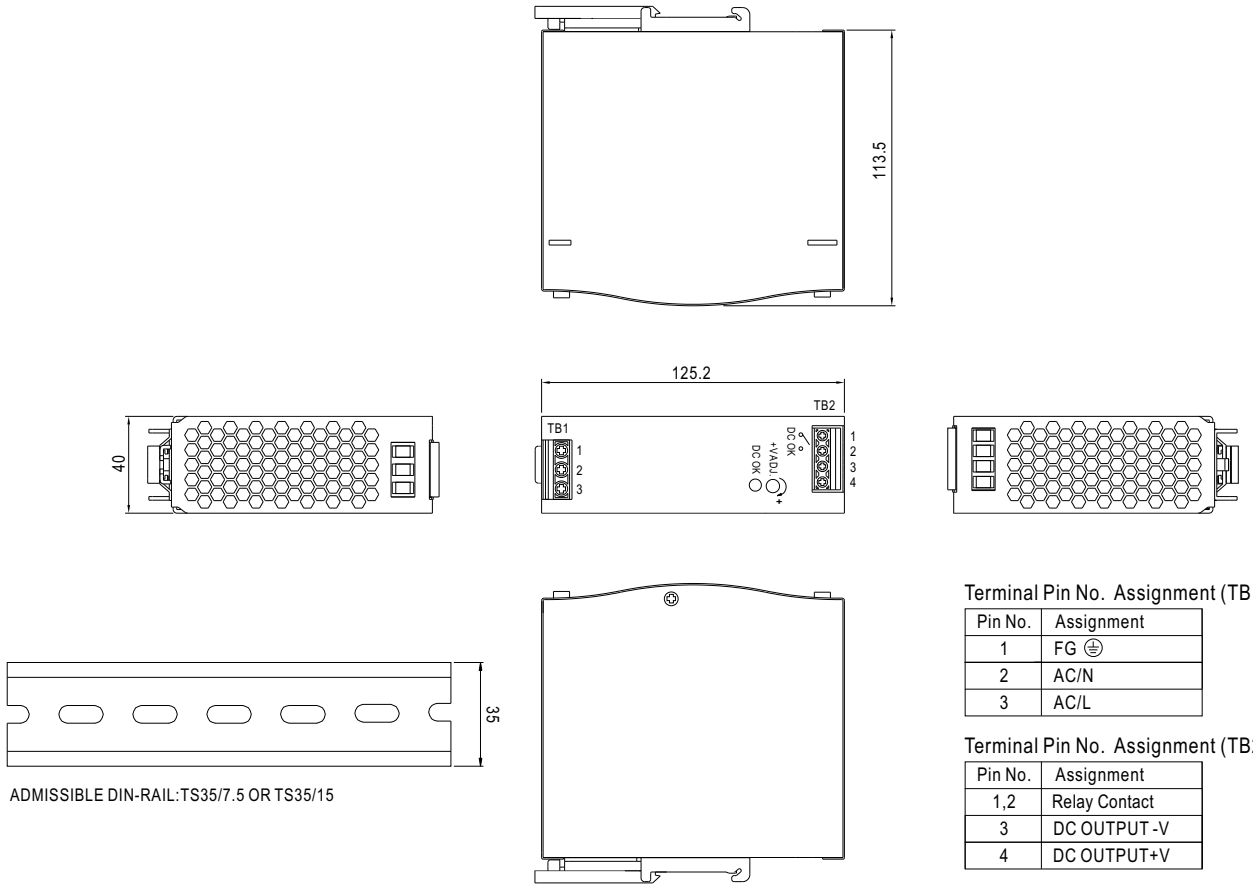

ADMISSIBLE DIN-RAIL:TS35/7.5 OR TS35/15

Terminal Pin No. Assignment (TB1)

Pin No.	Assignment
1	FG ⏚
2	AC/N
3	AC/L

Terminal Pin No. Assignment (TB2)

Pin No.	Assignment
1,2	Relay Contact
3	DC OUTPUT -V
4	DC OUTPUT+V

■ Block Diagram

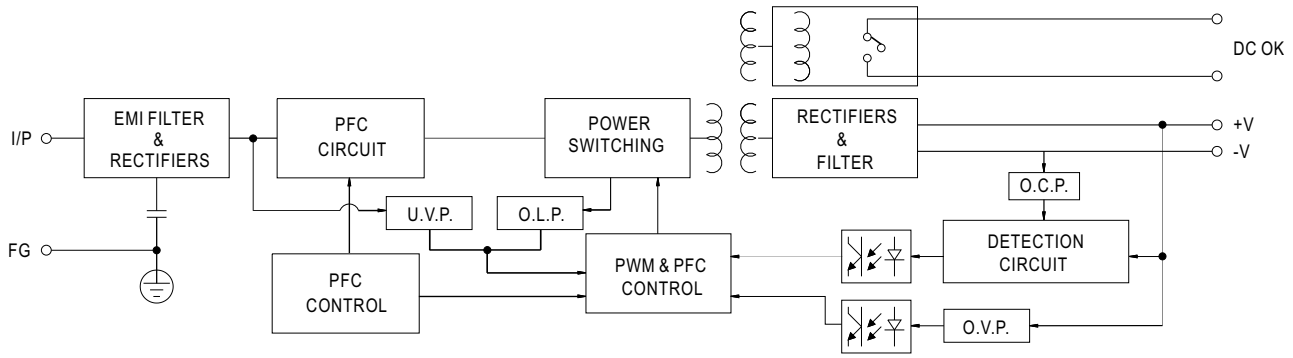

■ DC OK Relay Contact

Contact Close	PSU turns on / DC OK.
Contact Open	PSU turns off / DC Fail.
Contact Ratings (max.)	30V/1A resistive load.

Supporting your great ideas www.pewatron.com PEWATRON a member of the Angst + Pfister Group

■ Peak Loading

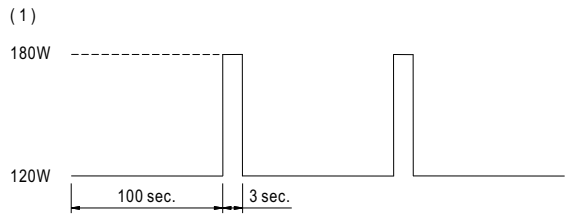

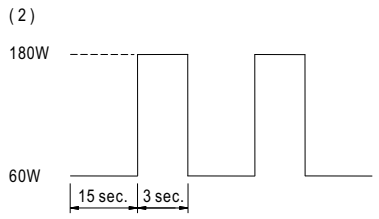

■ Derating Curve

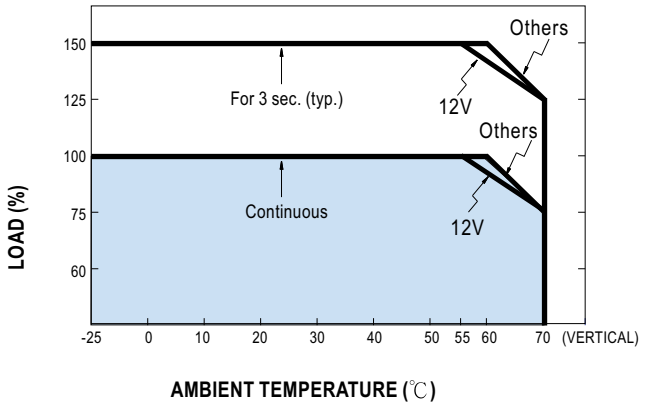

■ Output derating VS input voltage

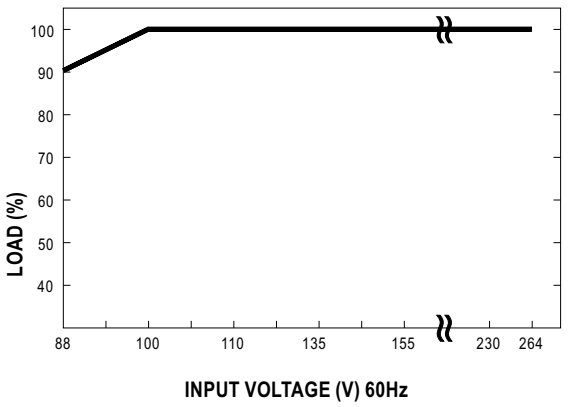

Supporting your great ideas
www.pewatron.com
PEWATRON
a member of the Angst + Pfister Group

PEWATRON
a member of the Angst + Pfister Group

We are here for you. Addresses and Contacts

Sales Switzerland

Postcode 3000 – 9999
Liechtenstein

Matthias Rüegg
Ruhbergstrasse 32
CH-9230 Flawil

Phone + 41 44 877 35 18
Mobile + 41 76 491 66 66
Fax + 41 44 877 35 19

matthias.rueegg@pewatron.com

Postcode 1000 – 2999

Raffael Favaretto
Route d'Oron 124
CH-1673 Promasens

Phone + 41 44 877 35 22
Mobile + 41 76 444 63 14
Fax + 41 44 877 35 23

raffael.favaretto@pewatron.com

Sales Germany

Postcode 60000 – 79999

Dieter Hirthe
Mühlweg 23
D-71554 Weissach i.T.

Phone + 49 719 149 60 58
Mobile + 49 163 762 74 30
Fax + 49 719 193 31 88

dieter.hirthe@pewatron.com

Postcode 10000 – 59999
Postcode 80000 – 99999

Kurt Stritzelberger
Neumarkter Str. 86a
D-81673 Munich

Phone + 49 89 260 38 47
Mobile + 49 171 803 41 35
Fax + 49 89 43 10 91 91

kurt.stritzelberger@pewatron.com

Key Accounts
Aerospace and Defence

Claus Wübbena
Vogelkamp 26
D-26655 Westerstede

Phone + 49 4488 5204 614
Mobile + 49 173 9700 691
Fax + 49 4488 5204 616

claus.wuebbena@pewatron.com

Sales Austria

Kurt Stritzelberger
Neumarkter Str. 86a
D-81673 Munich

Phone + 49 89 260 38 47
Mobile + 49 17 18 03 41 35
Fax + 49 89 43 10 91 91

kurt.stritzelberger@pewatron.com

Sales Other Countries / Product Management

Sensors

Physical Sensors
Data Acquisition

Peter Felder
Phone + 41 44 877 35 05
peter.felder@pewatron.com

Geometrical Sensors

Eric Letsch
Phone + 41 44 877 35 14
eric.letsch@pewatron.com

Power Supplies

DC-DC Converters
Switching Power Supplies
DC-AC Inverters

Sebastiano Leggio
Phone + 41 44 877 35 06
sebastiano.leggio@pewatron.com

E-Components

Current Sensors
Man Machine Interface
Measurement Probes

Sebastiano Leggio
Phone + 41 44 877 35 06
sebastiano.leggio@pewatron.com

PEWATRON AG
Thurgauerstrasse 66
CH-8052 Zurich

Phone + 41 44 877 35 00
Fax + 41 44 877 35 25

www.pewatron.com
info@pewatron.com