PROTEK POWER

650-700 WATT MEDICAL SWITCHING POWER SUPPLIES

DESCRIPTION

The PM650 series comprising single and multiple output models for 650-700 watts of continuous output power is specially designed for medical and ITE applications, not for life-support. They operate at 90-264 VAC input voltage without the need of a selector strap. The units are constructed on a printed circuit board with a U-bracket for mechanical support and heat sinking. A cover-and-fan assembly can be added during manufacturing.

PM650 SERIES

CE (LVD)
RoHS

FEATURES

- EN61000-3-2 class A and D compliant
- Power Factor 0.98 typical
- Overvoltage protection
- Short-circuit protection
- Thermal protection
- Power Fail Detect (PFD)
- 100% burn-in at full rated load
- Remote sense on output #1 and output #2
- Remote inhibit – TTL high disables output
- Compliant with RoHS requirements

Safety Standard Approvals :

UL60601-1, CSA C22.2 No. 601.1
File No. E178020

UL 60950-1, CSA C22.2 No. 60950-1

TÜV EN60601-1

TÜV EN60950-1

INPUT SPECIFICATIONS

Input voltage :	90-264 VAC
Input frequency :	47-63 Hz
Input current :	10 A (rms) for 115 VAC 5 A (rms) for 230 VAC
Earth leakage current :	100 uA max. @ 115 VAC, 60 Hz 165 uA max. @ 230 VAC, 50 Hz

ENVIRONMENTAL SPECIFICATIONS

Operating temperature :	0℃to+70℃
Storage temperature :	-40℃to+85℃
Relative humidity :	5% to 95% non-condensing
Derating :	Derate from 100% at +50℃ linearly to 50% at +70℃

OUTPUT SPECIFICATIONS

Output voltage/current :	See rating chart
Total output power :	See rating chart
Ripple and Noise :	2% peak to peak maximum
Overvoltage protection :	Provided on output #1 only; set at 115-140%of its nominal output voltage
Overcurrent protection :	All outputs protected to short circuit conditions
Temperature coefficient :	All outputs ±0.04% /℃ maximum
Transient response :	Maximum excursion of 4% or better on all models, recovering to 1%of final value within 500us after a 25% step load change
PFD signal :	TTL logic high for normal operation and TTL logic low upon loss of input power. This signal appears at least 1ms prior to master output dropping 5% below its nominal value. This signal also provides a minimum delay of 100 ms after master output is within regulation.
Remote inhibit :	Requires an external TTL high level signal to inhibit outputs for standard models.

GENERAL SPECIFICATIONS

Switching frequency :	70 KHz±10 KHz
Power factor :	0.98 typical
Efficiency :	80% minimum on all models
Hold-up time :	12 msec minimum at 110 VAC
Line regulation :	±0.2% maximum at full load
Inrush current :	50 A @115 VAC or 100 A@ 230 VAC at 25℃ cold start
Withstand voltage :	4000 VAC from input to output 1500 VAC from input to ground 500 VAC from output to ground
MTBF :	300,000 hours minimum at full load at 25℃ ambient, calculated per MIL-HDBK- 217F

EMC Performance (EN60601-1-2)

EN55011:	Class B conducted, Class A radiated
EN61000-3-2:	Harmonic distortion, Class A and D
EN61000-3-3:	Line flicker
EN61000-4-2:	ESD, ±8 KV air and ±6 KV contact
EN61000-4-3:	Radiated immunity, 3 V/m
EN61000-4-4:	Fast transient/burst, ±2 KV
EN61000-4-5:	Surge, ±1 KV diff., ±2 KV com.
EN61000-4-6:	Conducted immunity, 3 Vrms
EN61000-4-8:	Magnetic field immunity, 3 A/m
EN61000-4-11:	Voltage dips, 30% reduction for 500 ms, 60% reduction for 100 ms and >95% reduction for 10 ms

Supporting your great ideas www.pewatron.com PEWATRON a member of the Angst + Pfister Group

UNIVERSAL INPUT PM650 MEDICAL SERIES

OUTPUT VOLTAGE/CURRENT RATING CHART

MODEL	Output # 1 Vnom.	Output # 1 Imin.	Output # 1 Imax.	Output # 1 Tol.	Output # 2 Vnom.	Output # 2 Imin.	Output # 2 Imax.	Output # 2 Tol.	Output # 3 Vnom.	Output # 3 Imin.	Output # 3 Imax.	Output # 3 Tol.	Maximum Output Power
PM650-12	12 V	0 A	54.2 A	2%									650 W
PM650-13	15 V	0 A	43.4 A	2%									650 W
PM650-14	24 V	0 A	27.1 A	2%									650 W
PM650-15	27 V	0 A	24.1 A	2%									650 W
PM650-16	30 V	0 A	21.7 A	2%									650 W
PM650-17	36 V	0 A	18.1 A	2%									650 W
PM650-18	48 V	0 A	14.6 A	2%									700 W
PM650-20	24 V	1.5 A	18 A	2%	12 V	1.2 A	22 A	5%					650 W
PM650-21	24 V	1.5 A	18 A	2%	15 V	1.0 A	18 A	5%					650 W
PM650-22	48 V	0.75 A	9 A	2%	24 V	0.6 A	12 A	5%					650 W
PM650-23	48 V	0.75 A	9 A	2%	12 V	1.2 A	22 A	5%					650 W
PM650-24	48 V	0.75 A	9 A	2%	15 V	1.0 A	18 A	5%					650 W
PM650-30	24 V	1.5 A	18 A	2%	12 V	1.2 A	22 A	5%	3.3 V	0 A	10 A	3%	650 W
PM650-31	24 V	1.5 A	18 A	2%	15 V	1.0 A	18 A	5%	3.3 V	0 A	10 A	3%	650 W
PM650-32	24 V	1.5 A	18 A	2%	12 V	1.2 A	22 A	5%	5.1 V	0 A	10 A	3%	650 W
PM650-33	24 V	1.5 A	18 A	2%	15 V	1.0 A	18 A	5%	5.1 V	0 A	10 A	3%	650 W
PM650-34	48 V	0.75 A	9 A	2%	12 V	1.2 A	22 A	5%	3.3 V	0 A	10 A	3%	650 W
PM650-35	48 V	0.75 A	9 A	2%	15 V	1.0 A	18 A	5%	3.3 V	0 A	10 A	3%	650 W
PM650-36	48 V	0.75 A	9 A	2%	12 V	1.2 A	22 A	5%	5.1 V	0 A	10 A	3%	650 W
PM650-37	48 V	0.75 A	9 A	2%	15 V	1.0 A	18 A	5%	5.1 V	0 A	10 A	3%	650 W

NOTES:
1. Add suffix “B” for U-bracket format or “C” for enclosed format with fan control function, e.g. PM650-14C.
2. All outputs are floating. It can be connected externally for positive or negative output.
3. Output #1 can be adjusted within +/- 5% of their nominal voltage.
4. Output #3 can be adjusted within +/- 15% of their nominal voltage.
5. 650-700 watts for "C" version with cover-and-fan assembly. 325-350 watts for "B" version without moving air (maximum current of output #1 and #2 derated to 70%), or 650 watts with 50 CFM forced air provided by user.
6. All models may operated at no-load. At no-load, output voltage tolerance increases to 10%.

MECHANICAL SPECIFICATIONS

Single Output Models

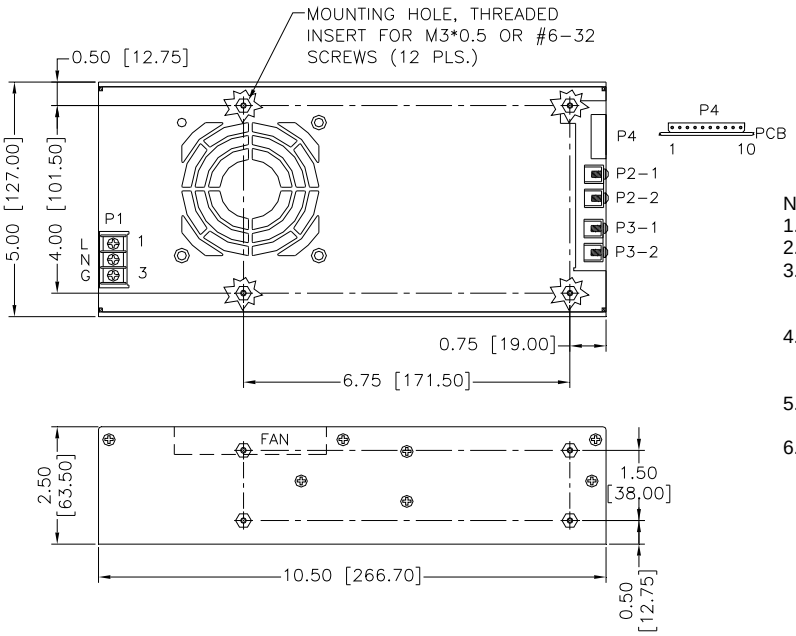

NOTES:
1. Dimensions shown in inches [mm]
2. Tolerance 0.02 [0.5] maximum.
3. Input connector P1 is Dinkle DT-35-B01W-03 screws with M3, nickel-plated screws.
4. Connector P4 mates with Molex housing 50-37-5103 and pins 5263.
5. P2-1, P2-2, P3-1 & P3-2: M3*0.5 screw connections.
6. Weight: 2.04 kgs.

Supporting your great ideas www.pewatron.com PEWATRON a member of the Angst + Pfister Group

UNIVERSAL INPUT PM650 MEDICAL SERIES

MECHANICAL SPECIFICATIONS

Multiple Output Models

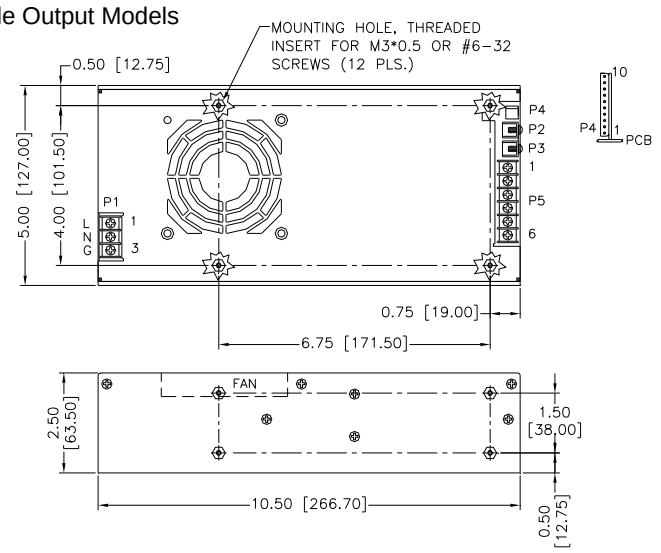

NOTES:
1. Dimensions shown in inches [mm]
2. Tolerance 0.02 [0.5] maximum
3. Input connector P1 is Dinkle DT-35-B01W-03 screws with M3, nickel-plated screws.
4. Connector P4 mates with Molex housing 50-37-5103 and pins 5263.
5. P2, P3: M3*0.05 screw connections.
6. Output connector P5 is Dinkle DT-35-B01W-06. Screws are M3, nickel plated.
7. Weight: 2.14 kgs.

PIN CHART

Single Output Models

MODEL / CONN / PIN	P1 (AC)			P2	P3	P4			
	1	2	3			1	2	3	4
PM650-12 PM650-13 PM650-14 PM650-15 PM650-16 PM650-17 PM650-18	LIVE	NEUTRAL	GROUND	+ V	- V	SIGNAL GROUND (- V)	+ S (V)	- S (V)	PFD

MODEL / CONN / PIN	P4					
	5	6	7	8	9	10
PM650-12 PM650-13 PM650-14 PM650-15 PM650-16 PM650-17 PM650-18	INHIBIT +Ve	INHIBIT -Ve	N.C.	N.C.	0V (FAN)	FAN

Multiple Output Models

MODEL / CONN / PIN	P1 (AC)			P2	P3	P4			
	1	2	3			1	2	3	4
PM650-20 PM650-21 PM650-22 PM650-23 PM650-24 PM650-30 PM650-31 PM650-32 PM650-33 PM650-34 PM650-35 PM650-36 PM650-37	LIVE	NEUTRAL	GROUND	+ V1	- V1	SIGNAL GROUND (- V)	+ S (V1)	- S (V1)	PFD

MODEL / CONN / PIN	P4						P5					
	5	6	7	8	9	10	1	2	3	4	5	6
PM650-20 PM650-21 PM650-22 PM650-23 PM650-24	INHIBIT +Ve	INHIBIT -Ve	+ S (V2)	- S (V2)	0V (FAN)	FAN	+ V2	+ V2	- V2	- V2	N.C.	N.C.
PM650-30 PM650-31 PM650-32 PM650-33 PM650-34 PM650-35 PM650-36 PM650-37							+ V2	+ V2	- V2	- V2	+ V3	- V3

Supporting your great ideas www.pewatron.com PEWATRON a member of the Angst + Pfister Group

PEWATRON
a member of the Angst + Pfister Group

We are here for you. Addresses and Contacts

Sales Switzerland

Postcode 3000 – 9999
Liechtenstein

Matthias Rüegg
Ruhbergstrasse 32
CH-9230 Flawil

Phone + 41 44 877 35 18
Mobile + 41 76 491 66 66
Fax + 41 44 877 35 19

matthias.rueegg@pewatron.com

Postcode 1000 – 2999

Raffael Favaretto
Route d'Oron 124
CH-1673 Promasens

Phone + 41 44 877 35 22
Mobile + 41 76 444 63 14
Fax + 41 44 877 35 23

raffael.favaretto@pewatron.com

Sales Germany

Postcode 60000 – 79999

Dieter Hirthe
Mühlweg 23
D-71554 Weissach i.T.

Phone + 49 719 149 60 58
Mobile + 49 163 762 74 30
Fax + 49 719 193 31 88

dieter.hirthe@pewatron.com

Postcode 10000 – 59999
Postcode 80000 – 99999

Kurt Stritzelberger
Neumarkter Str. 86a
D-81673 Munich

Phone + 49 89 260 38 47
Mobile + 49 171 803 41 35
Fax + 49 89 43 10 91 91

kurt.stritzelberger@pewatron.com

Key Accounts
Aerospace and Defence

Claus Wübbena
Vogelkamp 26
D-26655 Westerstede

Phone + 49 4488 5204 614
Mobile + 49 173 9700 691
Fax + 49 4488 5204 616

claus.wuebbena@pewatron.com

Sales Austria

Kurt Stritzelberger
Neumarkter Str. 86a
D-81673 Munich

Phone + 49 89 260 38 47
Mobile + 49 17 18 03 41 35
Fax + 49 89 43 10 91 91

kurt.stritzelberger@pewatron.com

Sales Other Countries / Product Management

Sensors

Physical Sensors
Data Acquisition

Peter Felder
Phone + 41 44 877 35 05
peter.felder@pewatron.com

Geometrical Sensors

Eric Letsch
Phone + 41 44 877 35 14
eric.letsch@pewatron.com

Power Supplies

DC-DC Converters
Switching Power Supplies
DC-AC Inverters

Sebastiano Leggio
Phone + 41 44 877 35 06
sebastiano.leggio@pewatron.com

E-Components

Current Sensors
Man Machine Interface
Measurement Probes

Sebastiano Leggio
Phone + 41 44 877 35 06
sebastiano.leggio@pewatron.com

PEWATRON AG
Thurgauerstrasse 66
CH-8052 Zurich

Phone + 41 44 877 35 00
Fax + 41 44 877 35 25

www.pewatron.com
info@pewatron.com