MEAN WELL

600W with PFC and Parallel Function

PSP-600 series

■ Features :

- Universal AC input / Full range
- Built-in active PFC function
- Protections: Short circuit / Overload / Over voltage / Over temperature
- Forced air cooling by built-in DC fan
- With DC OK Signal output
- Current sharing up to 2400W(3+1)
- Built-in remote ON-OFF control
- Built-in remote sense function
- Fixed switching frequency at PFC:88KHz PWM:100KHz
- 3 years warranty

SPECIFICATION

MODEL		PSP-600-5	PSP-600-12	PSP-600-13.5	PSP-600-15	PSP-600-24	PSP-600-27	PSP-600-48
OUTPUT	DC VOLTAGE	5V	12V	13.5V	15V	24V	27V	48V
	RATED CURRENT	80A	50A	44.5A	40A	25A	22.2A	12.5A
	CURRENT RANGE	0 ~ 80A	0 ~ 50A	0 ~ 44.5A	0 ~ 40A	0 ~ 25A	0 ~ 22.2A	0 ~ 12.5A
	RATED POWER	400W	600W	600W	600W	600W	600W	600W
	RIPPLE & NOISE (max.) Note.2	180mVp-p	240mVp-p	240mVp-p	240mVp-p	240mVp-p	240mVp-p	300mVp-p
	VOLTAGE ADJ. RANGE	4.75 ~ 5.5V	10 ~ 13.2V	12 ~ 15V	13.5 ~ 18V	20 ~ 26.4V	24 ~ 30V	41 ~ 56V
	VOLTAGE TOLERANCE Note.3	±2.0%	±1.0%	±1.0%	±1.0%	±1.0%	±1.0%	±1.0%
	LINE REGULATION	±0.5%	±0.5%	±0.5%	±0.5%	±0.5%	±0.5%	±0.5%
	LOAD REGULATION	±1.0%	±0.5%	±0.5%	±0.5%	±0.5%	±0.5%	±0.5%
	SETUP, RISE TIME	1500ms, 50ms at full load						
	HOLD UP TIME (Typ.)	20ms at full load						
INPUT	VOLTAGE RANGE Note.5	88 ~ 264VAC 124 ~ 370VDC						
	FREQUENCY RANGE	47 ~ 63Hz						
	POWER FACTOR (Typ.)	0.95/230VAC 0.99/115VAC at full load						
	EFFICIENCY(Typ.)	79%	84%	85%	85%	86%	86%	87%
	AC CURRENT (Typ.)	6.8A/115VAC 3.4A/230VAC						
	INRUSH CURRENT (Typ.)	20A/115VAC 40A/230VAC						
	LEAKAGE CURRENT	<1.3mA/240VAC						
PROTECTION	OVERLOAD	105 ~ 135% rated output power						
		Protection type : Constant current limiting, recovers automatically after fault condition is removed						
	OVER VOLTAGE	5.75 ~ 6.75V	13.8 ~ 16.2V	15.5 ~ 18.2V	18 ~ 21V	27.6 ~ 32.4V	31 ~ 36.5V	57.6 ~ 67.2V
		Protection type : Shut down o/p voltage, re-power on to recover						
	OVER TEMPERATURE	+5V: 95℃(TSW1) detect on heatsink of power transistor; 95℃(TSW51) detect on heatsink of power diode						
		+12V ~ +48V: 85℃(TSW1) detect on heatsink of power transistor; 80℃(TSW51) detect on heatsink of power diode						
		Protection type : Shut down o/p voltage, re-power on to recover						
FUNCTION	REMOTE CONTROL	RC+/RC-: Short = power on ; Open = power off						
	POK SIGNAL	PSU turn on: 3.3V ~ 5.6V PSU turn off: 0V ~ 1V						
ENVIRONMENT	WORKING TEMP.	-20 ~ +60℃ (Refer to output load derating curve)						
	WORKING HUMIDITY	20 ~ 90% RH non-condensing						
	STORAGE TEMP., HUMIDITY	-40 ~ +85℃, 10 ~ 95% RH						
	TEMP. COEFFICIENT	±0.03%/℃ (0 ~ 50℃)						
	VIBRATION	10 ~ 500Hz, 2G 10min./1cycle, period for 60min. each along X, Y, Z axes						
SAFETY & EMC (Note 4)	SAFETY STANDARDS	UL60950-1, TUV EN60950-1 approved						
	WITHSTAND VOLTAGE	I/P-O/P:3KVAC I/P-FG:1.5KVAC O/P-FG:0.5KVAC						
	ISOLATION RESISTANCE	I/P-O/P, I/P-FG, O/P-FG:100M Ohms/500VDC						
	EMI CONDUCTION & RADIATION	Compliance to EN55022 (CISPR22) Class B						
	HARMONIC CURRENT	Compliance to EN61000-3-2,-3						
	EMS IMMUNITY	Compliance to EN61000-4-2,3,4,5,6,8,11; ENV50204, light industry level, criteria A						
OTHERS	MTBF	116.4K hrs min. MIL-HDBK-217F (25℃)						
	DIMENSION	170*120*93mm (L*W*H)						
	PACKING	1.9Kg; 8pcs/15.5Kg/1.06CUFT						
NOTE	1. All parameters NOT specially mentioned are measured at 230VAC input, rated load and 25℃ of ambient temperature. 2. Ripple & noise are measured at 20MHz of bandwidth by using a 12" twisted pair-wire terminated with a 0.1uf & 47uf parallel capacitor. 3. Tolerance : includes set up tolerance, line regulation and load regulation. 4. The power supply is considered a component which will be installed into a final equipment. The final equipment must be re-confirmed that it still meets EMC directives. 5. Derating may be needed under low input voltages. Please check the derating curve for more details.							

File Name:PSP-600-SPEC 2008-03-24

MEAN WELL

600W with PFC and Parallel Function

PSP-600 series

■ Mechanical Specification

Case No.910A Unit:mm

RS Connector(CN5) : JST B-XH or equivalent

Pin No.	Assignment	Mating Housing	Terminal
1	RS+	JST XHP or equivalent	JST SXH-001T or equivalent
2	RS-		

Terminal Pin No. Assignment

Pin No.	Assignment
1	AC/L
2	AC/N
3	FG ⏚
4	P(Current Share)
5	POK
6	R.C. G
7	R.C.
8~11	DC OUTPUT +V
12~15	DC OUTPUT -V

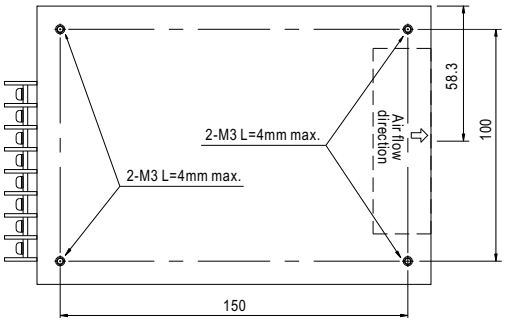

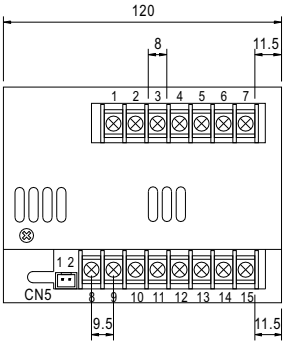

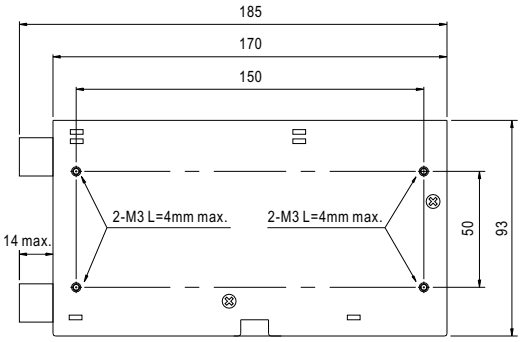

■ Block Diagram

PFC fosc : 88KHz
PWM fosc : 100KHz

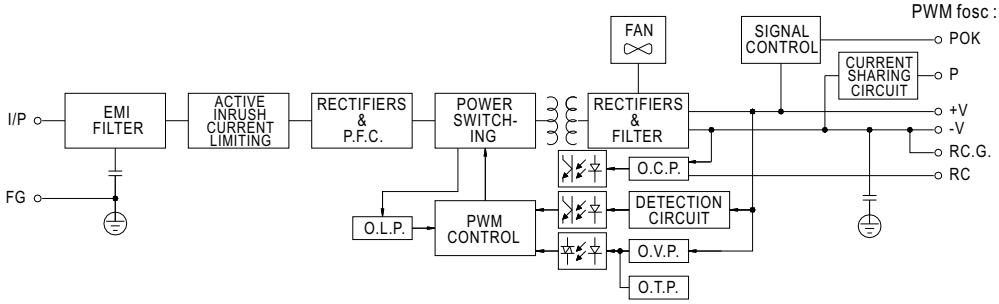

■ Derating Curve

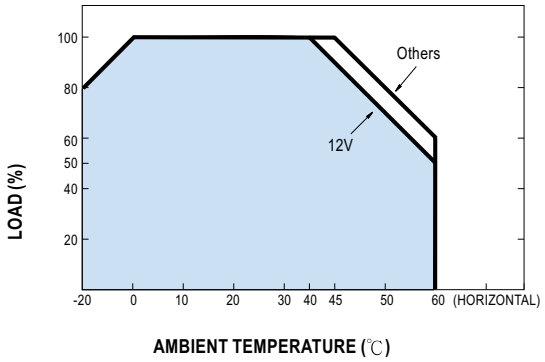

■ Output Derating VS Input Voltage

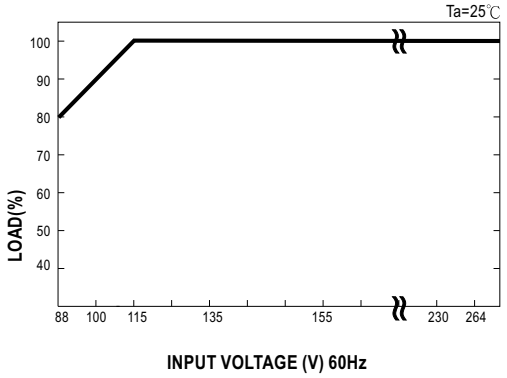

File Name:PSP-600-SPEC 2008-03-24

■ Control Terminal Instruction Manual

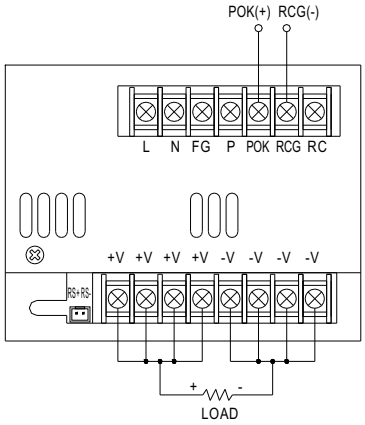

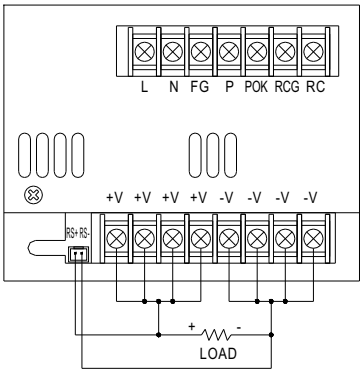

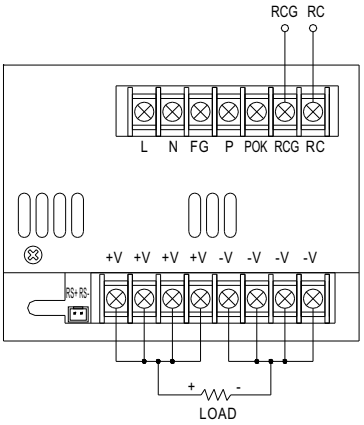

POK Signal

POK Signal is the voltage difference between
"RCG" and "POK" pin output POK Signal for TTL level signal
PSU turn on: 3.3V ~ 5.6V
PSU turn off: 0V ~ 1V

Remote Sensing

Remote Control

Power ON: RCG and RC for short
Power OFF: RCG and RC for open

■ Parallel Operation with Remote Sensing

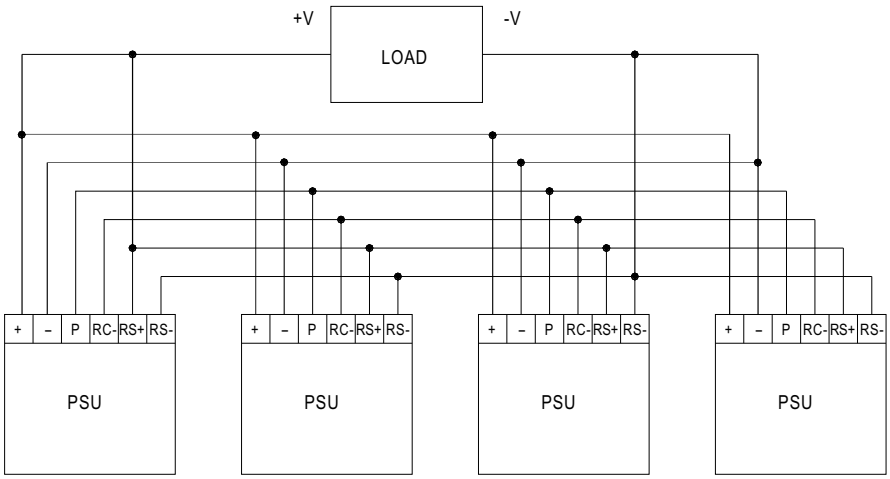

File Name:PSP-600-SPEC 2008-03-24

PEWATRON
a member of the Angst + Pfister Group

We are here for you. Addresses and Contacts

Sales Switzerland

Postcode 3000 – 9999
Liechtenstein

Matthias Rüegg
Ruhbergstrasse 32
CH-9230 Flawil

Phone + 41 44 877 35 18
Mobile + 41 76 491 66 66
Fax + 41 44 877 35 19

matthias.rueegg@pewatron.com

Postcode 1000 – 2999

Raffael Favaretto
Route d'Oron 124
CH-1673 Promasens

Phone + 41 44 877 35 22
Mobile + 41 76 444 63 14
Fax + 41 44 877 35 23

raffael.favaretto@pewatron.com

Sales Germany

Postcode 60000 – 79999

Dieter Hirthe
Mühlweg 23
D-71554 Weissach i.T.

Phone + 49 719 149 60 58
Mobile + 49 163 762 74 30
Fax + 49 719 193 31 88

dieter.hirthe@pewatron.com

Postcode 10000 – 59999
Postcode 80000 – 99999

Kurt Stritzelberger
Neumarkter Str. 86a
D-81673 Munich

Phone + 49 89 260 38 47
Mobile + 49 171 803 41 35
Fax + 49 89 43 10 91 91

kurt.stritzelberger@pewatron.com

Key Accounts
Aerospace and Defence

Claus Wübbena
Vogelkamp 26
D-26655 Westerstede

Phone + 49 4488 5204 614
Mobile + 49 173 9700 691
Fax + 49 4488 5204 616

claus.wuebbena@pewatron.com

Sales Austria

Kurt Stritzelberger
Neumarkter Str. 86a
D-81673 Munich

Phone + 49 89 260 38 47
Mobile + 49 17 18 03 41 35
Fax + 49 89 43 10 91 91

kurt.stritzelberger@pewatron.com

Sales Other Countries / Product Management

Sensors

Physical Sensors
Data Acquisition

Peter Felder
Phone + 41 44 877 35 05
peter.felder@pewatron.com

Geometrical Sensors

Eric Letsch
Phone + 41 44 877 35 14
eric.letsch@pewatron.com

Power Supplies

DC-DC Converters
Switching Power Supplies
DC-AC Inverters

Sebastiano Leggio
Phone + 41 44 877 35 06
sebastiano.leggio@pewatron.com

E-Components

Current Sensors
Man Machine Interface
Measurement Probes

Sebastiano Leggio
Phone + 41 44 877 35 06
sebastiano.leggio@pewatron.com

PEWATRON AG
Thurgauerstrasse 66
CH-8052 Zurich

Phone + 41 44 877 35 00
Fax + 41 44 877 35 25

www.pewatron.com
info@pewatron.com