POWER MATE TECHNOLOGY CO.,LTD.

FEC15-SERIES

FEATURES

- 15 WATTS OUTPUT POWER
- OUTPUT CURRENT UP TO 4A
- STANDARD 2.0 X 1.0 X 0.4 INCH PACKAGE
- HIGH EFFICIENCY UP TO 88%
- 2:1 WIDE INPUT VOLTAGE RANGE
- SIX-SIDED CONTINUOUS SHIELD
- FIXED SWITCHING FREQUENCY
- CE MARK MEETS 2006/95/EC,93/68/EEC AND 2004/108/EC
- UL60950-1, EN60950-1 AND IEC60950-1 LICENSED
- ISO9001 CERTIFIED MANUFACTURING FACILITIES
- COMPLIANT TO RoHS EU DIRECTIVE 2002/95/EC

APPLICATIONS

Wireless Network
Telecom/Datacom
Industry Control System
Measurement Equipment
Semiconductor Equipment

OPTIONS

Positive logic & Negative logic Remote On/Off

DESCRIPTION

The FEC15 series offer 15 watts of output power from a 2 x 1 x 0.4 inch package. The FEC15 series with 2:1 wide input voltage of 9-18, 18-36 and 36-75VDC.

TECHNICAL SPECIFICATION

All specifications are typical at nominal input, full load and 25ºC unless otherwise noted

OUTPUT SPECIFICATIONS			
Output power			15 Watts, max.
Voltage accuracy	Full load and nominal Vin		± 1%
Minimum load (Note 6)			See Table
Line regulation	LL to HL at Full Load		± 0.5%
Load regulation	Min. load to Full load	Single Dual	± 0.5% ± 1%
Cross regulation (Dual)	Asymmetrical load 25% / 100% FL		± 5%
Ripple and noise	20MHz bandwidth	Single Dual	50mVp-p 75mVp-p
Temperature coefficient			±0.02% / ºC, max.
Transient response recovery time	25% load step change		250µS
Over voltage protection (Zener diode clamp)	3.3V output 5V output 12V output 15V output		3.9VDC 6.2VDC 15VDC 18VDC
Over load protection	% of FL at nominal input		150%, max.
Short circuit protection			Hiccup, automatics recovery

GENERAL SPECIFICATIONS		
Efficiency		See table
Isolation voltage		1600VDC, min.
Isolation resistance		10^9 ohms, min.
Isolation capacitance		300pF, max.
Switching frequency	Single output Dual output	500KHz, typ. 300KHz, typ.
Approvals and standard		IEC60950-1, UL60950-1, EN60950-1
Case material		Nickel-coated copper
Base material		Non-conductive black plastic
Potting material		Epoxy (UL94-V0)
Dimensions		2.00 X 1.00 X 0.40 Inch (50.8 X 25.4 X 10.2 mm)
Weight		27g (0.95oz)
MTBF (Note 1)	BELLCORE TR-NWT-000332 MIL-HDBK-217F	2.041 x 10^6 hrs 1.044 x 10^6 hrs

INPUT SPECIFICATIONS			
Input voltage range	12V nominal input 24V nominal input 48V nominal input		9 – 18VDC 18 – 36VDC 36 – 75VDC
Input filter			Pi type
Input surge voltage 100mS max	12V input 24V input 48V input		36VDC 50VDC 100VDC
Input reflected ripple current	Nominal Vin and full load		20mAp-p
Start up time	Nominal Vin and constant resistive load	Power up	20mS, typ.
Remote ON/OFF (Option) (Note 7)			
(Positive logic)	DC-DC ON DC-DC OFF		Open or 3.5V < Vr < 12V Short or 0V < Vr < 1.2V
(Negative logic)	DC-DC ON DC-DC OFF		Short or 0V < Vr < 1.2V Open or 3.5V < Vr < 12V
Input current of remote control pin	Nominal Vin		-0.5mA ~ +1mA
Remote off state input current	Nominal Vin		20mA

ENVIRONMENTAL SPECIFICATIONS		
Operating ambient temperature		-40ºC ~ +85ºC (with derating)
Maximum case temperature		100ºC
Storage temperature range		-55ºC ~ +105ºC
Thermal impedance (Note 8)	Nature convection Nature convection with heat-sink	12ºC/Watt 10ºC/Watt
Thermal shock		MIL-STD-810F
Vibration		MIL-STD-810F
Relative humidity		5% to 95% RH

EMC CHARACTERISTICS				
EMI (Note 9)	EN55022			Class A
ESD	EN61000-4-2	Air Contact	± 8KV ± 6KV	Perf. Criteria B
Radiated immunity	EN61000-4-3		10 V/m	Perf. Criteria A
Fast transient (Note 10)	EN61000-4-4		± 2KV	Perf. Criteria B
Surge (Note 10)	EN61000-4-5		± 1KV	Perf. Criteria B
Conducted immunity	EN61000-4-6		10 Vr.m.s	Perf. Criteria A

POWER MATE TECHNOLOGY CO.,LTD.

15 WATTS DC-DC CONVERTER

Model Number	Input Range	Output Voltage	Output Current		Output (4) Ripple & Noise	Input Current		Eff (4) (%)	Capacitor (5) Load max
			Min. load	Full load		No load (3)	Full load (2)		
FEC15-12S33	9 – 18 VDC	3.3 VDC	0mA	4000mA	50mVp-p	30mA	1467mA	79	10200µF
FEC15-12S05	9 – 18 VDC	5 VDC	15mA	3000mA	50mVp-p	25mA	1603mA	82	7050µF
FEC15-12S12	9 – 18 VDC	12 VDC	0mA	1250mA	50mVp-p	25mA	1524mA	86	1035µF
FEC15-12S15	9 – 18 VDC	15 VDC	0mA	1000mA	50mVp-p	20mA	1524mA	86	705µF
FEC15-12D05	9 – 18 VDC	± 5 VDC	0mA	± 1500mA	75mVp-p	20mA	1582mA	83	± 1020µF
FEC15-12D12	9 – 18 VDC	± 12 VDC	0mA	± 625mA	75mVp-p	30mA	1524mA	86	± 495µF
FEC15-12D15	9 – 18 VDC	± 15 VDC	±10mA	± 500mA	75mVp-p	35mA	1563mA	84	± 165µF
FEC15-24S33	18 – 36 VDC	3.3 VDC	0mA	4000mA	50mVp-p	15mA	724mA	80	10200µF
FEC15-24S05	18 – 36 VDC	5 VDC	15mA	3000mA	50mVp-p	10mA	781mA	84	7050µF
FEC15-24S12	18 – 36 VDC	12 VDC	0mA	1250mA	50mVp-p	20mA	772mA	85	1035µF
FEC15-24S15	18 – 36 VDC	15 VDC	10mA	1000mA	50mVp-p	15mA	772mA	85	705µF
FEC15-24D05	18 – 36 VDC	± 5 VDC	0mA	± 1500mA	75mVp-p	15mA	781mA	84	± 1020µF
FEC15-24D12	18 – 36 VDC	± 12 VDC	0mA	± 625mA	75mVp-p	25mA	762mA	86	± 495µF
FEC15-24D15	18 – 36 VDC	± 15 VDC	0mA	± 500mA	75mVp-p	25mA	762mA	86	± 165µF
FEC15-48S33	36 – 75 VDC	3.3 VDC	0mA	4000mA	50mVp-p	10mA	357mA	81	10200µF
FEC15-48S05	36 – 75 VDC	5 VDC	0mA	3000mA	50mVp-p	20mA	396mA	83	7050µF
FEC15-48S12	36 – 75 VDC	12 VDC	10mA	1250mA	50mVp-p	15mA	377mA	87	1035µF
FEC15-48S15	36 – 75 VDC	15 VDC	0mA	1000mA	50mVp-p	15mA	381mA	86	705µF
FEC15-48D05	36 – 75 VDC	± 5 VDC	0mA	± 1500mA	75mVp-p	10mA	386mA	85	± 1020µF
FEC15-48D12	36 – 75 VDC	± 12 VDC	0mA	± 625mA	75mVp-p	15mA	372mA	88	± 495µF
FEC15-48D15	36 – 75 VDC	± 15 VDC	0mA	± 500mA	75mVp-p	15mA	377mA	87	± 165µF

Note

1. BELLCORE TR-NWT-000332. Case 1: 50% Stress, Temperature at 40ºC.
   MIL-HDBK-217F Notice2 @Ta=25 ºC, Full load(Ground, Benign, controlled environment).
2. Maximum value at nominal input voltage and full load
3. Typical value at nominal input voltage and no load.
4. Typical value at nominal input voltage and full load.
5. Test by minimum Vin and constant resistive load.
6. The output requires a minimum loading on the output to maintain specified regulation. Operation under no-load condition will not damage these devices, however they may not meet all listed specification.
7. The ON/OFF control pin voltage is referenced to -Vin.
   To order positive logic ON-OFF control add the suffix-P (Ex: FEC15-24S05-P)
   To order negative logic ON-OFF control add the suffix-N (Ex: FEC15-24S05-N)
8. Heat sink is optional and P/N: 7G-0020C-F.
9. The FEC15 series can meet EN55022 Class A with parallel an external capacitor to the input pins.
   Recommend: 12Vin : 6.8µF/50V 1812 MLCC . 24Vin : 2.2µF/50V 1812 MLCC . 48Vin : 1.5µF/100V 1812 MLCC.
10. An external input filter capacitor is required if the module has to meet EN61000-4-4, EN61000-4-5.
    The filter capacitor Power Mate suggest: Nippon chemi-con KY series, 220µF/100V, ESR 48mΩ.

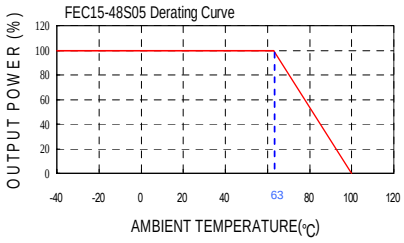

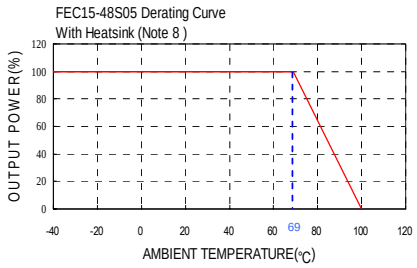

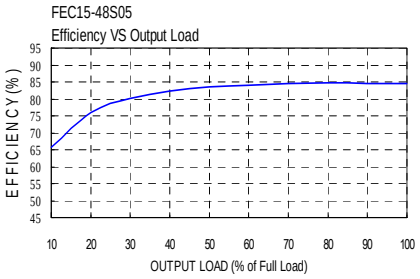

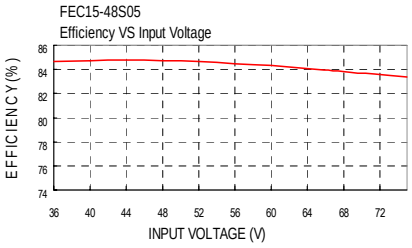

POWER MATE TECHNOLOGY CO.,LTD.

15 WATTS DC-DC CONVERTER

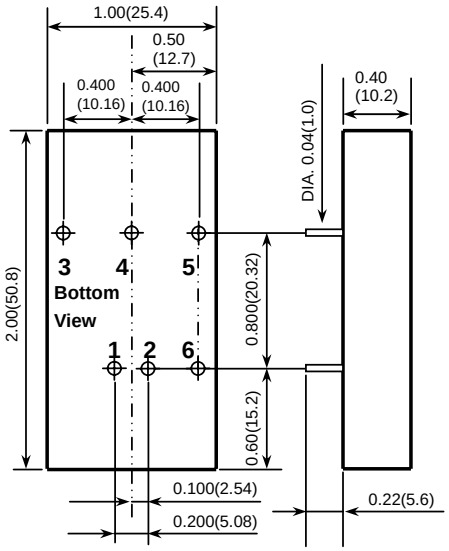

1. All dimensions in Inches (mm)
   Tolerance: X.XX±0.02 (X.X±0.5)
   X.XXX±0.01 (X.XX±0.25)
2. Pin pitch tolerance ±0.01(0.25)

PIN CONNECTION		
PIN	SINGLE	DUAL
1	+ INPUT	+ INPUT
2	- INPUT	- INPUT
3	+ OUTPUT	+ OUTPUT
4	NO PIN	COMMON
5	- OUTPUT	- OUTPUT
6	CTRL (Option)	CTRL (Option)

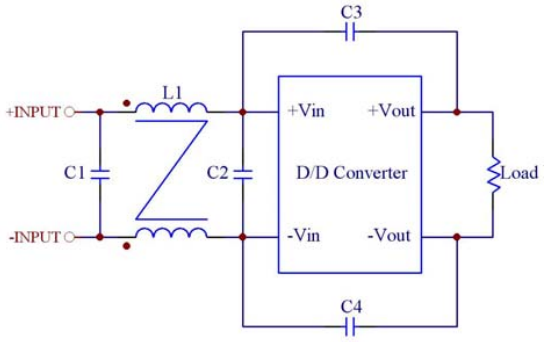

Recommended Filter for EN55022 Class B Compliance

The components used in the above figure, together with the manufacturers' part numbers for these components, are as follows:

	C1	C2	C3	C4	L1
FEC15-12xxx	4.7µF /50V 1812 MLCC	N/A	1000pF/2KV MLCC	1000pF/2KV MLCC	325µH Common Choke PMT-050
FEC15-24xxx	3.3µF /50V 1812 MLCC	N/A	1000pF/2KV MLCC	1000pF/2KV MLCC	325µH Common Choke PMT-050
FEC15-48xxx	2.2µF /100V 1812 MLCC	2.2µF /100V 1812 MLCC	1000pF/2KV MLCC	1000pF/2KV MLCC	325µH Common Choke PMT-050

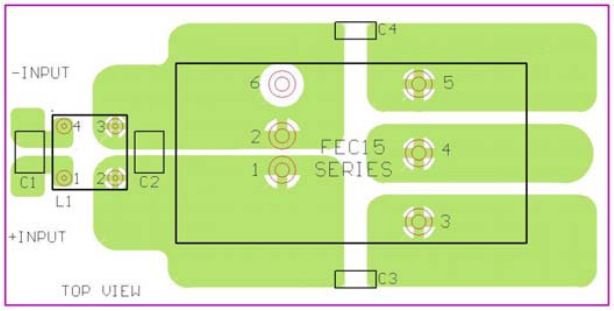

Recommended EN55022 Class B Filter Circuit Layout

PEWATRON
a member of the Angst + Pfister Group

We are here for you. Addresses and Contacts

Sales Switzerland

Postcode 3000 – 9999
Liechtenstein

Matthias Rüegg
Ruhbergstrasse 32
CH-9230 Flawil

Phone + 41 44 877 35 18
Mobile + 41 76 491 66 66
Fax + 41 44 877 35 19

matthias.rueegg@pewatron.com

Postcode 1000 – 2999

Raffael Favaretto
Route d'Oron 124
CH-1673 Promasens

Phone + 41 44 877 35 22
Mobile + 41 76 444 63 14
Fax + 41 44 877 35 23

raffael.favaretto@pewatron.com

Sales Germany

Postcode 60000 – 79999

Dieter Hirthe
Mühlweg 23
D-71554 Weissach i.T.

Phone + 49 719 149 60 58
Mobile + 49 163 762 74 30
Fax + 49 719 193 31 88

dieter.hirthe@pewatron.com

Postcode 10000 – 59999
Postcode 80000 – 99999

Kurt Stritzelberger
Neumarkter Str. 86a
D-81673 Munich

Phone + 49 89 260 38 47
Mobile + 49 171 803 41 35
Fax + 49 89 43 10 91 91

kurt.stritzelberger@pewatron.com

Key Accounts
Aerospace and Defence

Claus Wübbena
Vogelkamp 26
D-26655 Westerstede

Phone + 49 4488 5204 614
Mobile + 49 173 9700 691
Fax + 49 4488 5204 616

claus.wuebbena@pewatron.com

Sales Austria

Kurt Stritzelberger
Neumarkter Str. 86a
D-81673 Munich

Phone + 49 89 260 38 47
Mobile + 49 17 18 03 41 35
Fax + 49 89 43 10 91 91

kurt.stritzelberger@pewatron.com

Sales Other Countries / Product Management

Sensors

Physical Sensors
Data Acquisition

Peter Felder
Phone + 41 44 877 35 05
peter.felder@pewatron.com

Geometrical Sensors

Eric Letsch
Phone + 41 44 877 35 14
eric.letsch@pewatron.com

Power Supplies

DC-DC Converters
Switching Power Supplies
DC-AC Inverters

Sebastiano Leggio
Phone + 41 44 877 35 06
sebastiano.leggio@pewatron.com

E-Components

Current Sensors
Man Machine Interface
Measurement Probes

Sebastiano Leggio
Phone + 41 44 877 35 06
sebastiano.leggio@pewatron.com

PEWATRON AG
Thurgauerstrasse 66
CH-8052 Zurich

Phone + 41 44 877 35 00
Fax + 41 44 877 35 25

www.pewatron.com
info@pewatron.com