POWER MATE TECHNOLOGY CO.,LTD.

FDC40-SERIES

- **40 WATTS OUTPUT POWER**
- **2:1 WIDE INPUT VOLTAGE RANGE**
- **DESIGN MEET SAFETY STANDARD**
- **SIX-SIDED CONTINUOUS SHIELD**
- **HIGH EFFICIENCY UP TO 90%**
- **STANDARD 3” X 2.6” X 0.4” PACKAGE**
- **FIXED SWITCHING FREQUENCY**

The FDC40 series offer 40 Watts of output power from a 3 x 2.6 x 0.4 inch package. The FDC40 series have 2:1 wide input voltage of 9-18, 18-36 and 36-75VDC. The FDC40 features 1600VDC of isolation, short-circuit and over-voltage protection, as well as six sided shielding. Designed meets the safety of EN60950-1 and UL60950-1. All models are particularly suited to telecommunications, industrial, mobile telecom and test equipment applications.

TECHNICAL SPECIFICATION

All specifications are typical at nominal input, full load and 25ºC unless otherwise noted

OUTPUT SPECIFICATIONS			
Output power			40 Watts, max.
Voltage accuracy	Full load and nominal Vin	Single & Dual Triple 3.3V/5V Auxiliary	± 2% ± 2% ± 5%
Voltage adjustability (Note 5: only for single output)			± 10%
Minimum load (Note 6)	FDC40-XXD3305 Others	3.3V output	20% min. 10% of FL
Line regulation	LL to HL at Full Load	Single Dual Triple 3.3V/5V Auxiliary	± 0.5% ± 1% ± 2% ± 5%
Load regulation	10% to 100% FL	Single Dual Triple 3.3V/5V Auxiliary	± 0.5% ± 1% ± 2% ± 5%
Cross regulation (Note 7)		Dual Triple 3.3V/5V Auxiliary	± 1% ± 1% ± 5%
Ripple and noise	20MHz bandwidth (Measured with a 104pF/50V MLCC)		See table
Temperature coefficient			±0.02% / ºC, max.
Transient response recovery time	25% load step change		500µS
Over voltage protection Zener diode clamp	3.3V output 5V output 12V output 15V output		3.9VDC 6.2VDC 15VDC 18VDC
Over load protection	% of FL at nominal input		150%, max.
Short circuit protection			Hiccup, automatics recovery

INPUT SPECIFICATIONS			
Input voltage range		12V nominal input 24V nominal input 48V nominal input	9 – 18VDC 18 – 36VDC 36 – 75VDC
Input filter			Pi type
Input surge voltage 100mS max		12V input 24V input 48V input	36VDC 50VDC 100VDC
Input reflected ripple(Note 8)		Nominal Vin and full load	40mAp-p
Start up time	Nominal Vin and constant resistive load	Powe up Remote ON/OFF	25mS, typ. 25mS, typ.
Remote ON/OFF (Note 9)		DC-DC ON DC-DC OFF	Open or 3.5V < Vr < 12V Short or 0V < Vr < 1.2V
Remote off input current		Nominal input	30mA

GENERAL SPECIFICATIONS		
Efficiency		See table
Isolation voltage	Input to Output Input(Output)to Case	1600VDC, min. 1000VDC, min.
Isolation resistance		10^9ohms, min.
Isolation capacitance		500Pf, max.
Switching frequency		185KHz, typ.
Design meet safety standard		IEC60950-1, UL60950-1, EN60950-1
Case material		Nickel-coated copper
Base material		FR4 PCB
Potting material		Epoxy (UL94-V0)
Dimensions		3.03 X 2.62 X 0.40 Inch (77.0 X 66.5 X 10.2 mm)
Weight		125g (4.4oz)
MTBF (Note 1)		1.590 x 10^6 hrs

ENVIRONMENTAL SPECIFICATIONS		
Operating ambient temperature		-40ºC ~ +85ºC (with derating)
Maximum case temperature		+100ºC
Storage temperature range		-55ºC ~ +105ºC
Thermal impedance	Nature convection 500LFM	7.28ºC/Watt 1.62ºC/Watt
Thermal shock		MIL-STD-810F
Vibration		MIL-STD-810F
Relative humidity		5% to 95% RH

EMC CHARACTERISTICS		
Conducted emissions	EN55022	Class A
Radiated emissions	EN55022	Class A
ESD	EN61000-4-2	Perf. Criteria B
Radiated immunity	EN61000-4-3	Perf. Criteria A
Fast transient	EN61000-4-4	Perf. Criteria B
Surge	EN61000-4-5	Perf. Criteria B
Conducted immunity	EN61000-4-6	Perf. Criteria A

POWER MATE TECHNOLOGY CO.,LTD.

P-DUKE

40 WATTS DC-DC CONVERTER

Model Number	Input Range	Output Voltage	Output Current	Output Ripple & Noise	Input Current (2)	Eff (3) (%)	Capacitor (4) Load max
FDC40-12S33	9 – 18 VDC	3.3 VDC	10000mA	50mVp-p	3530mA	82	25800µF
FDC40-12S05	9 – 18 VDC	5 VDC	8000mA	50mVp-p	4120mA	85	13600µF
FDC40-12S12	9 – 18 VDC	12 VDC	3400mA	120mVp-p	4150mA	86	2400µF
FDC40-12S15	9 – 18 VDC	15 VDC	2700mA	150mVp-p	4120mA	86	1550µF
FDC40-12D05	9 – 18 VDC	± 5 VDC	+7000 / -1000mA	75mVp-p	4330mA	81	12000 / 1700µF
FDC40-12D12	9 – 18 VDC	± 12 VDC	± 1800mA	120mVp-p	4550mA	83	± 1200µF
FDC40-12D15	9 – 18 VDC	± 15 VDC	± 1400mA	150mVp-p	4430mA	83	± 750µF
FDC40-12D3305	9 – 18 VDC	3.3 / 5VDC	4000 / 4000mA	75mVp-p	3730mA	78	10300 / 6800µF
FDC40-12T0512	9 – 18 VDC	5 / ± 12 VDC	4000 / ± 850mA	50 / 120mVp-p	4490mA	79	6800 / ± 590µF
FDC40-12T0515	9 – 18 VDC	5 / ± 15 VDC	4000 / ± 680mA	50 / 150mVp-p	4430mA	80	6800 / ± 380µF
FDC40-24S33	18 – 36 VDC	3.3 VDC	10000mA	50mVp-p	1660mA	87	25800µF
FDC40-24S05	18 – 36 VDC	5 VDC	8000mA	50mVp-p	1990mA	88	13600µF
FDC40-24S12	18 – 36 VDC	12 VDC	3400mA	120mVp-p	2000mA	89	2400µF
FDC40-24S15	18 – 36 VDC	15 VDC	2700mA	150mVp-p	1990mA	89	1550µF
FDC40-24D05	18 – 36 VDC	± 5 VDC	+7000 / -1000mA	75mVp-p	2160mA	81	12000 / 1700µF
FDC40-24D12	18 – 36 VDC	± 12 VDC	± 1800mA	120mVp-p	2200mA	86	± 1200µF
FDC40-24D15	18 – 36 VDC	± 15 VDC	± 1400mA	150mVp-p	2140mA	86	± 750µF
FDC40-24D3305	18 – 36 VDC	3.3 / 5VDC	4000 / 4000mA	75mVp-p	1840mA	79	10300 / 6800µF
FDC40-24T0512	18 – 36 VDC	5 / ± 12 VDC	4000 / ± 850mA	50 / 120mVp-p	2220mA	80	6800 / ± 590µF
FDC40-24T0515	18 – 36 VDC	5 / ± 15 VDC	4000 / ± 680mA	50 / 150mVp-p	2160mA	82	6800 / ± 380µF
FDC40-48S33	36 – 75 VDC	3.3 VDC	10000mA	50mVp-p	850mA	85	25800µF
FDC40-48S05	36 – 75 VDC	5 VDC	8000mA	50mVp-p	980mA	89	13600µF
FDC40-48S12	36 – 75 VDC	12 VDC	3400mA	120mVp-p	1000mA	89	2400µF
FDC40-48S15	36 – 75 VDC	15 VDC	2700mA	150mVp-p	1000mA	88	1550µF
FDC40-48D05	36 – 75 VDC	± 5 VDC	+7000 / -1000mA	75mVp-p	1060mA	84	12000 / 1700µF
FDC40-48D12	36 – 75 VDC	± 12 VDC	± 1800mA	120mVp-p	1100mA	86	± 1200µF
FDC40-48D15	36 – 75 VDC	± 15 VDC	± 1400mA	150mVp-p	1070mA	86	± 750µF
FDC40-48D3305	36 – 75 VDC	3.3 / 5VDC	4000 / 4000mA	75mVp-p	910mA	80	10300 / 6800µF
FDC40-48T0512	36 – 75 VDC	5 / ± 12 VDC	4000 / ± 850mA	50 / 120mVp-p	1060mA	83	6800 / ± 590µF
FDC40-48T0515	36 – 75 VDC	5 / ± 15 VDC	4000 / ± 680mA	50 / 150mVp-p	1060mA	83	6800 / ± 380µF

Note

1. BELLCORE TR-NWT-000332. Case I: 50% Stress, Temperature at 40ºC. (Ground fixed and controlled environment)
2. Maximum value at nominal input voltage and full load
3. Typical value at nominal input voltage and full load
4. Test by minimum Vin and constant resistive load.
5. Maximum output deviation is 10% inclusive of remote sense and trim. If remote sense is not being used, the +Vsense should be connected to its corresponding +OUTPUT and likewise the sense should be connected to its corresponding –OUTPUT.
6. The FDC40 series required a minimum 10% loading on the output to maintain specified regulation. Operation under no-load condition will not damage these devices, however they may not meet all listed specification.
7. Cross regulation:
   Dual output—Asymmetrical load 25% to 100% full load
   Triple output – 3.3V / 5V 100% load and one of auxiliary 100% load, other auxiliary load change from 25% to 100% load
8. Please add an external filter at converter input terminals when measuring input reflected ripple, as Figure 1.
   L : Simulated source impedance of 12µH.
   C: Nippon chemi-con KY series, 220µF/100V
9. The ON-OFF control pin voltage is reference to negative input.

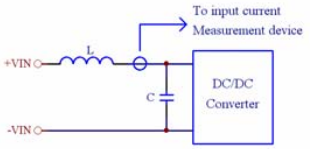

FDC40-48S05
Efficiency VS Input Voltage

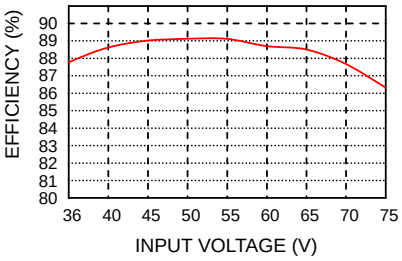

FDC40-48S05 Derating Curve

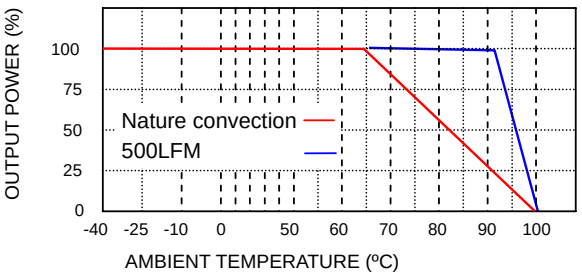

FDC40-48S05
Efficiency VS Output load

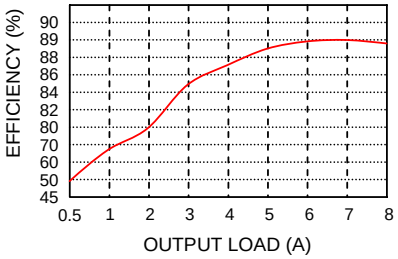

POWER MATE TECHNOLOGY CO.,LTD.

P-DUKE

40 WATTS DC-DC CONVERTER

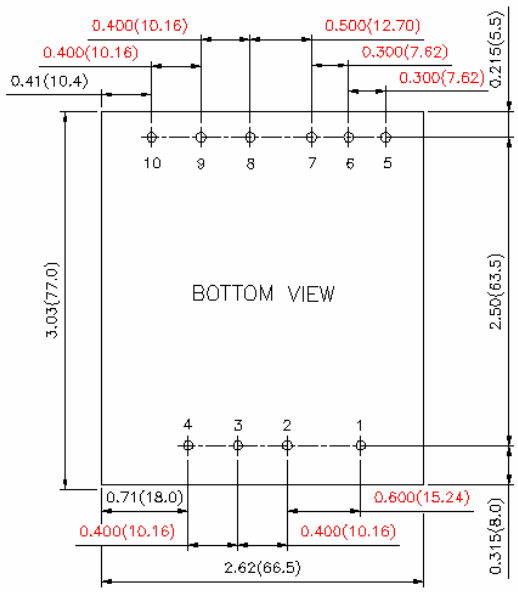

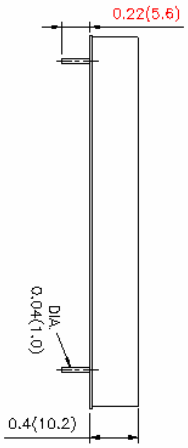

EXTERNAL OUTPUT TRIMMING

Output can be externally trimmed by using the method shown below.
( ) for dual output trim
[ ] for triple output trim
{ } XXD3305 only trim 3.3V

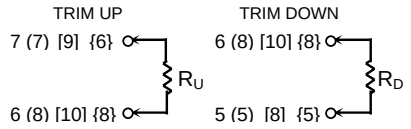

1.All dimensions in Inches (mm)
Tolerance: X.XX±0.02 (X.X±0.5)
X.XXX±0.01 (X.XX±0.25)
2. Pin pitch tolerance ±0.01(0.25)
3. Pin dimension tolerance ±0.004(0.1)

PIN CONNECTION

PIN	SINGLE	DUAL	TRIPLE	3.3V / 5V
1	CTRL	CTRL	CTRL	CTRL
2	+ INPUT	+ INPUT	+ INPUT	+ INPUT
3	- INPUT	- INPUT	- INPUT	- INPUT
4	SYNC	SYNC	SYNC	SYNC
5	+SENSE	+ OUTPUT	+ AUX	+3.3V
6	TRIM	COMMON	COMMON (AUX)	COMMON
7	-SENSE	- OUTPUT	- AUX	+ 5V
8	+ OUTPUT	TRIM	+ OUTPUT(PRIMARY)	TRIM
9	- OUTPUT	NC	COMMON(PRIMARY)	NC
10	NO PIN	NC	TRIM	NC

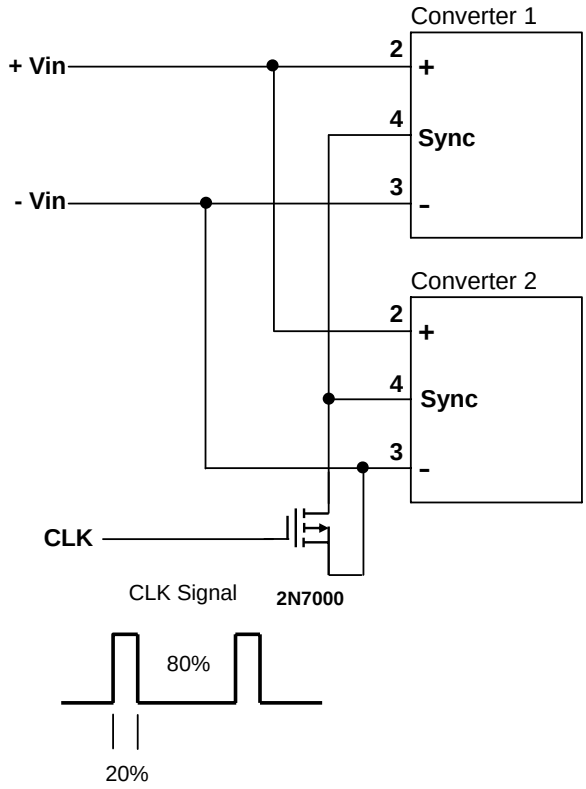

Application of synchronization

1. The unit is capable of external synchronization from an independent time base with a switching rate between 200kHz and 215kHz
2. The amplitude of the synchronizing pulse train is TTL compatible
3. The duty cycle of the CLK should be 20% high and 80% low
4. Synchronization is referenced to negative input (-Vin)

ON/OFF Control application

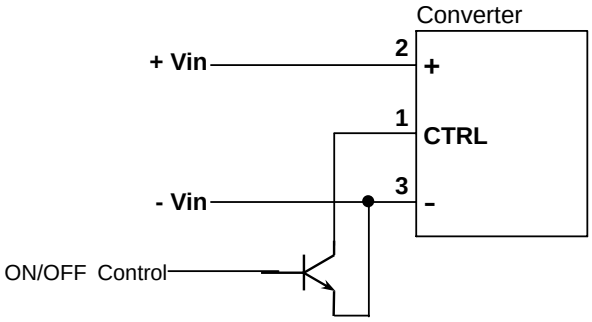

PEWATRON
a member of the Angst + Pfister Group

We are here for you. Addresses and Contacts

Sales Switzerland

Postcode 3000 – 9999
Liechtenstein

Matthias Rüegg
Ruhbergstrasse 32
CH-9230 Flawil

Phone + 41 44 877 35 18
Mobile + 41 76 491 66 66
Fax + 41 44 877 35 19

matthias.rueegg@pewatron.com

Postcode 1000 – 2999

Raffael Favaretto
Route d'Oron 124
CH-1673 Promasens

Phone + 41 44 877 35 22
Mobile + 41 76 444 63 14
Fax + 41 44 877 35 23

raffael.favaretto@pewatron.com

Sales Germany

Postcode 60000 – 79999

Dieter Hirthe
Mühlweg 23
D-71554 Weissach i.T.

Phone + 49 719 149 60 58
Mobile + 49 163 762 74 30
Fax + 49 719 193 31 88

dieter.hirthe@pewatron.com

Postcode 10000 – 59999
Postcode 80000 – 99999

Kurt Stritzelberger
Neumarkter Str. 86a
D-81673 Munich

Phone + 49 89 260 38 47
Mobile + 49 171 803 41 35
Fax + 49 89 43 10 91 91

kurt.stritzelberger@pewatron.com

Key Accounts
Aerospace and Defence

Claus Wübbena
Vogelkamp 26
D-26655 Westerstede

Phone + 49 4488 5204 614
Mobile + 49 173 9700 691
Fax + 49 4488 5204 616

claus.wuebbena@pewatron.com

Sales Austria

Kurt Stritzelberger
Neumarkter Str. 86a
D-81673 Munich

Phone + 49 89 260 38 47
Mobile + 49 17 18 03 41 35
Fax + 49 89 43 10 91 91

kurt.stritzelberger@pewatron.com

Sales Other Countries / Product Management

Sensors

Physical Sensors
Data Acquisition

Peter Felder
Phone + 41 44 877 35 05
peter.felder@pewatron.com

Geometrical Sensors

Eric Letsch
Phone + 41 44 877 35 14
eric.letsch@pewatron.com

Power Supplies

DC-DC Converters
Switching Power Supplies
DC-AC Inverters

Sebastiano Leggio
Phone + 41 44 877 35 06
sebastiano.leggio@pewatron.com

E-Components

Current Sensors
Man Machine Interface
Measurement Probes

Sebastiano Leggio
Phone + 41 44 877 35 06
sebastiano.leggio@pewatron.com

PEWATRON AG
Thurgauerstrasse 66
CH-8052 Zurich

Phone + 41 44 877 35 00
Fax + 41 44 877 35 25

www.pewatron.com
info@pewatron.com