POWER MATE TECHNOLOGY CO.,LTD.

FED30W-SERIES

FEATURES

- 30 WATTS OUTPUT POWER
- OUTPUT CURRENT UP TO 8.5A
- STANDARD 2.00 X 1.00 X 0.40 INCH
- HIGH EFFICIENCY UP TO 91%
- 4:1 ULTRA WIDE INPUT VOLTAGE RANGE
- SIX-SIDED CONTINUOUS SHIELD
- FIXED SWITCHING FREQUENCY
- CE MARK MEETS 2006/95/EC, 93/68/EEC AND 89/336 EEC
- DESIGN MEETS UL60950-1, EN60950-1 AND IEC60950-1
- ISO9001 CERTIFIED MANUFACTURING FACILITIES
- COMPLIANT TO RoHS EU DIRECTIVE 2002/95/EC

OPTIONS

Negative logic Remote On/Off

APPLICATIONS

Wireless Network
Telecom/Datacom
Industry Control System
Measurement
Semiconductor Equipment

DESCRIPTION

The FED30W series offer 30 watts of output power from a 2 x 1 x 0.4 inch package. FED30W series have 4:1 ultra wide input voltage of 9-36 and 18-75VDC. The FED30W have features 1600VDC of isolation, short circuit protection, over-current protection, over-voltage protection, over-temperature protection and six sided shielding.

TECHNICAL SPECIFICATION

All specifications are typical at nominal input, full load and 25ºC otherwise noted

OUTPUT SPECIFICATIONS			
Output power			30 Watts max.
Voltage accuracy	Full load and nominal Vin		±1%
Voltage adjustability	Single output		± 10%
Minimum load			0%
Line regulation	LL to HL at Full Load		± 0.2%
Load regulation	No load to Full load	Single Dual	± 0.5% ± 1%
Cross regulation (Dual)	Asymmetrical load 25% / 100% FL		± 5%
Ripple and noise	20MHz bandwidth (Measured with a 1uF/50V MLCC)	1.5-5.1Vo 12-15Vo	100mVp-p 150mVp-p
Temperature coefficient			±0.02% / ºC, max.
Transient response recovery time		25% load step change	250µS
Over voltage protection Zener diode clamp	1.5V 2.5V 3.3V 5.0V & 5.1V & ±5V 12V & ±12V 15V & ±15V	Output Output Output Output Output Output	2.0V 3.3V 3.9V 6.2V 15V 18V
Over load protection	% of FL at nominal input		150%, typ.
Short circuit protection			Hiccup, automatics recovery

GENERAL SPECIFICATIONS		
Efficiency		See table
Isolation voltage	Input to Output Input (Output) to Case	1600VDC, min. 1600VDC, min.
Case grounding	Connect case to -Vin with decoupling Y Cap	
Isolation resistance		10^9ohms, min.
Isolation capacitance		1500pF, max.
Switching frequency		430KHz,typ.
Design meets safety standard	IEC60950-1, UL60950-1, EN60950-1	
Case material		Nickel-coated copper
Base material		FR4 PCB
Potting material		Epoxy (UL94-V0)
Dimensions		2.00 X 1.00 X 0.40 Inch (50.8X 25.4 X 10.2 mm)
Weight		30.5g(1.07oz)
MTBF (Note 1)	BELLCORE-TR-NWT-000332 MIL-HDBK-217F	3.163 x 10^6 hrs. 4.347 x 10^5 hrs.

INPUT SPECIFICATIONS			
Input voltage range	24V nominal input 48V nominal input		9 – 36VDC 18 – 75VDC
Input filter			Pi type
Input surge voltage 100mS max	24V input 48V input		50VDC 100VDC
Input reflected ripple current	Nominal Vin and full load		20mAp-p
Start up time	Nominal Vin and constant resistive load	Power up Remote ON/OFF	30mS, typ. 30mS, typ.
Start-up voltage	24V input 48V input		9VDC 18VDC
Shutdown voltage	24V input 48V input		8VDC 16VDC
Remote ON/OFF (Note 6) (Positive logic)(Standard)	DC-DC ON DC-DC OFF		Open or 3V < Vr < 12V Short or 0V < Vr < 1.2V
(Negative logic)(Option)	DC-DC ON DC-DC OFF		Short or 0V < Vr < 1.2V Open or 3V < Vr < 12V
Input current of Remote control pin	Nominal Vin		-0.5mA ~ +0.5mA
Remote off state input current	Nominal Vin		3mA

ENVIRONMENTAL SPECIFICATIONS		
Operating ambient temperature		-40ºC to +50ºC (without derating) +50ºC to +85ºC (with derating)
Maximum case temperature		105ºC
Storage temperature range		-55ºC to +125ºC
Over temperature protection		115ºC, typ
Thermal impedance (Note 7)	Nature convection Nature convection with heat-sink	12ºC/Watt 10ºC/Watt
Thermal shock		MIL-STD-810F
Vibration		MIL-STD-810F
Relative humidity		5% to 95% RH

EMC CHARACTERISTICS			
EMI (Note 8)	EN55022		Class A
ESD	EN61000-4-2	Air ± 8KV Contact ± 6KV	Perf. Criteria A
Radiated immunity	EN61000-4-3	10 V/m	Perf. Criteria A
Fast transient (Note 9)	EN61000-4-4	± 2KV	Perf. Criteria A
Surge (Note 9)	EN61000-4-5	± 1KV	Perf. Criteria A
Conducted immunity	EN61000-4-6	10 Vr.m.s	Perf. Criteria A

P-DUKE

POWER MATE TECHNOLOGY CO.,LTD.

30 WATTS DC-DC CONVERTER

Model Number	Input Range	Output Voltage	Output Current		Output [4] Ripple & Noise	Input Current		Eff [4] (%)	Capacitor[5] Load max.
			Min. Load	Max. Load		No load[3]	Full Load[2]		
FED30-24S1P5W	9 – 36 VDC	1.5 VDC	0mA	8500mA	100mVp-p	70mA	700mA	80	20000μF
FED30-24S2P5W	9 – 36 VDC	2.5 VDC	0mA	8000mA	100mVp-p	70mA	1054mA	83	20000μF
FED30-24S3P3W	9 – 36 VDC	3.3 VDC	0mA	7500mA	100mVp-p	70mA	1258mA	86	20000μF
FED30-24S05W	9 – 36 VDC	5.0 VDC	0mA	6000mA	100mVp-p	105mA	1488mA	88	14400μF
FED30-24S5P1W	9 – 36 VDC	5.1 VDC	0mA	6000mA	100mVp-p	105mA	1517mA	88	14400μF
FED30-24S12W	9 – 36 VDC	12 VDC	0mA	2500mA	150mVp-p	20mA	1471mA	89	3000μF
FED30-24S15W	9 – 36 VDC	15 VDC	0mA	2000mA	150mVp-p	30mA	1471mA	89	2000μF
FED30-24D05W	9 – 36 VDC	±5VDC	0mA	±3000mA	100mVp-p	90mA	1488mA	88	± 3000μF
FED30-24D12W	9 – 36 VDC	±12VDC	0mA	±1250mA	150mVp-p	25mA	1506mA	87	± 2000μF
FED30-24D15W	9 – 36 VDC	±15VDC	0mA	±1000mA	150mVp-p	25mA	1506mA	87	± 1300μF
FED30-48S1P5W	18 – 75 VDC	1.5 VDC	0mA	8500mA	100mVp-p	30mA	350mA	80	20000μF
FED30-48S2P5W	18 – 75 VDC	2.5 VDC	0mA	8000mA	100mVp-p	45mA	520mA	84	20000μF
FED30-48S3P3W	18 – 75 VDC	3.3 VDC	0mA	7500mA	100mVp-p	45mA	629mA	86	20000μF
FED30-48S05W	18 – 75 VDC	5.0 VDC	0mA	6000mA	100mVp-p	65mA	744mA	88	14400μF
FED30-48S5P1W	18 – 75 VDC	5.1 VDC	0mA	6000mA	100mVp-p	65mA	759mA	88	14400μF
FED30-48S12W	18 – 75 VDC	12 VDC	0mA	2500mA	150mVp-p	60mA	727mA	90	3000μF
FED30-48S15W	18 – 75 VDC	15 VDC	0mA	2000mA	150mVp-p	50mA	718mA	91	2000μF
FED30-48D05W	18 – 75 VDC	±5VDC	0mA	±3000mA	100mVp-p	50mA	744mA	88	± 3000μF
FED30-48D12W	18 – 75 VDC	±12VDC	0mA	±1250mA	150mVp-p	15mA	744mA	88	± 2000μF
FED30-48D15W	18 – 75 VDC	±15VDC	0mA	±1000mA	150mVp-p	15mA	744mA	88	± 1300μF

Note

1. BELLCORE TR-NWT-000332. Case I: 50% Stress, Temperature at 40ºC. (Ground fixed and controlled environment)
   MIL-STD-217F Notice2 @Ta=25 ºC, Full load (Ground, Benign, controlled environment)
2. Maximum value at nominal input voltage.
3. Typical value at nominal input voltage and no load.
4. Typical value at nominal input voltage and full load.
5. Test by minimum Vin and constant resistive load.
6. The ON/OFF control pin voltage is referenced to -Input.
7. Heat sink is optional and P/N: 7G-0020C-F.
8. The FED30W series can meet EN55022 Class A with parallel an external capacitor to the input pins.
   Recommend: 24Vin : 4.7μF/50V X7R 1812 MLCC.
   48Vin : 2.2μF/100V X7R 1812 MLCC.
9. An external filter capacitor is required if the module has to meet EN61000-4-4,EN61000-4-5.
   The filter capacitor we suggest: 24Vin : Nippon chemi-con KY series, 330μF/50V, ESR 55mΩ.
   48Vin : Nippon chemi-con KY series, 220μF/100V, ESR 48mΩ

FED30-48S05W Derating Curve

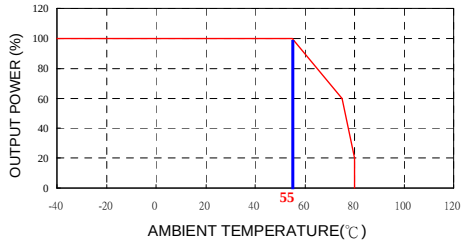

FED30-48S05W Derating Curve with Heat-Sink

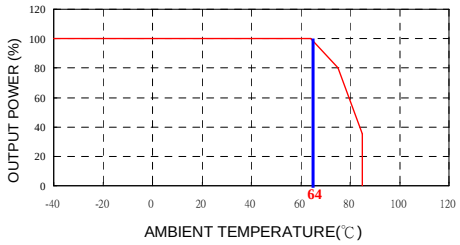

FED30-48S05W Efficiency VS Input voltage

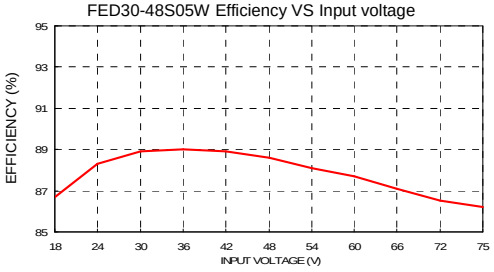

FED30-48S05W Efficiency VS Output Load

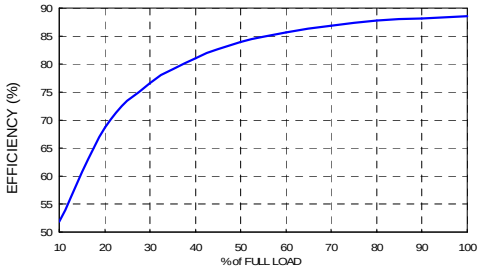

POWER MATE TECHNOLOGY CO.,LTD.

P-DUKE

30 WATTS DC-DC CONVERTER

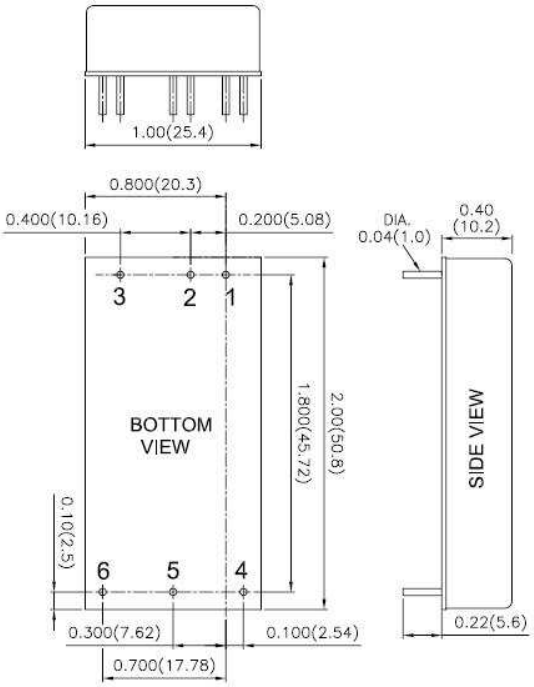

1. All dimensions in Inches (mm)
   Tolerance: X.XX±0.02 (X.X±0.5)
   X.XXX±0.01 (X.XX±0.25)
2. Pin pitch tolerance ±0.01(0.25)
3. Pin dimension tolerance ±0.004 (0.1)

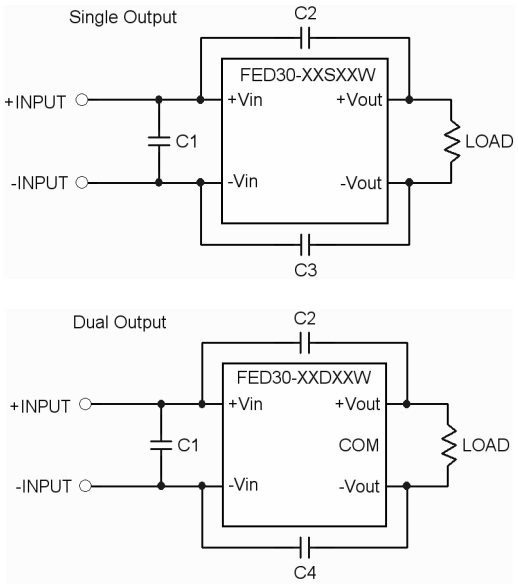

Recommended Filter for EN55022 Class A Compliance

The components used in the above figure, together with the manufacturers' part numbers for these components, are as follows:

Single Output	C1	C2 & C3
FED30-24S XX W	6.8μF/50V 1812 MLCC	1000pF/2KV 1808 MLCC
FED30-48S XX W	2.2μF/100V 1812 MLCC	1000pF/2KV 1808 MLCC

Dual Output	C1	C2 & C4
FED30-24D XX W	6.8μF/50V 1812 MLCC	1000pF/2KV 1808 MLCC
FED30-48D XX W	2.2μF/100V 1812 MLCC	1000pF/2KV 1808 MLCC

PIN CONNECTION		
PIN	SINGLE	DUAL
1	+ INPUT	+ INPUT
2	- INPUT	- INPUT
3	CTRL	CTRL
4	+ OUTPUT	+ OUTPUT
5	- OUTPUT	COMMON
6	TRIM	- OUTPUT

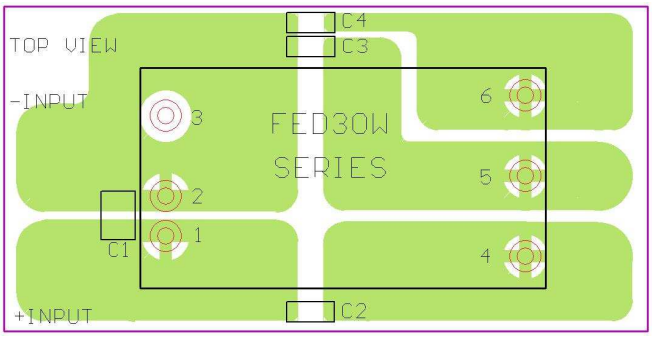

Recommended EN55022 Class A Filter Circuit Layout

PEWATRON
a member of the Angst + Pfister Group

We are here for you. Addresses and Contacts

Sales Switzerland

Postcode 3000 – 9999
Liechtenstein

Matthias Rüegg
Ruhbergstrasse 32
CH-9230 Flawil

Phone + 41 44 877 35 18
Mobile + 41 76 491 66 66
Fax + 41 44 877 35 19

matthias.rueegg@pewatron.com

Postcode 1000 – 2999

Raffael Favaretto
Route d'Oron 124
CH-1673 Promasens

Phone + 41 44 877 35 22
Mobile + 41 76 444 63 14
Fax + 41 44 877 35 23

raffael.favaretto@pewatron.com

Sales Germany

Postcode 60000 – 79999

Dieter Hirthe
Mühlweg 23
D-71554 Weissach i.T.

Phone + 49 719 149 60 58
Mobile + 49 163 762 74 30
Fax + 49 719 193 31 88

dieter.hirthe@pewatron.com

Postcode 10000 – 59999
Postcode 80000 – 99999

Kurt Stritzelberger
Neumarkter Str. 86a
D-81673 Munich

Phone + 49 89 260 38 47
Mobile + 49 171 803 41 35
Fax + 49 89 43 10 91 91

kurt.stritzelberger@pewatron.com

Key Accounts
Aerospace and Defence

Claus Wübbena
Vogelkamp 26
D-26655 Westerstede

Phone + 49 4488 5204 614
Mobile + 49 173 9700 691
Fax + 49 4488 5204 616

claus.wuebbena@pewatron.com

Sales Austria

Kurt Stritzelberger
Neumarkter Str. 86a
D-81673 Munich

Phone + 49 89 260 38 47
Mobile + 49 17 18 03 41 35
Fax + 49 89 43 10 91 91

kurt.stritzelberger@pewatron.com

Sales Other Countries / Product Management

Sensors

Physical Sensors
Data Acquisition

Peter Felder
Phone + 41 44 877 35 05
peter.felder@pewatron.com

Geometrical Sensors

Eric Letsch
Phone + 41 44 877 35 14
eric.letsch@pewatron.com

Power Supplies

DC-DC Converters
Switching Power Supplies
DC-AC Inverters

Sebastiano Leggio
Phone + 41 44 877 35 06
sebastiano.leggio@pewatron.com

E-Components

Current Sensors
Man Machine Interface
Measurement Probes

Sebastiano Leggio
Phone + 41 44 877 35 06
sebastiano.leggio@pewatron.com

PEWATRON AG
Thurgauerstrasse 66
CH-8052 Zurich

Phone + 41 44 877 35 00
Fax + 41 44 877 35 25

www.pewatron.com
info@pewatron.com