POWER MATE TECHNOLOGY CO.,LTD.

PDS(H)03 SERIES

FEATURES

- 3 WATTS MAXIMUM OUTPUT POWER
- SMD AND DIP PACKAGE, 0.74 x 0.50 x 0.33 INCH
- SMD PACKAGE QUALIFIED FOR LEADFREE REFLOW SOLDER PROCESS ACCORDING IPC J-STD-020D
- 2:1 WIDE INPUT VOLTAGE RANGE
- HIGH EFFICIENCY UP TO 83%
- INPUT TO OUTPUT ISOLATION: 1600VDC
- LOW RIPPLE & NOISE
- EXTERNAL ON/OFF CONTROL
- SWITCHING FREQUENCY (100KHz, MIN)
- CONTINUOUS SHORT CIRCUIT PROTECTION
- UL94-V0 PACKAGE MATERIALS
- CE MARK MEETS 2006/95/EC, 93/68/EEC AND 2004/108/EC
- UL60950-1, EN60950-1 AND IEC60950-1 LICENSED
- COMPLIANT TO RoHS EU DIRECTIVE 2002/95/EC

APPLICATIONS

Wireless Network
Telecom/Datacom
Industry Control System
Measurement Equipment
Semiconductor Equipment

OPTIONS

3000VDC ISOLATION

DESCRIPTION

The PDS03(SMD type), PDH03(DIP type) offer 3 watts of output power from a 0.74 x 0.50 x 0.33 inch package without derating to 71ºC. The PDS(H)03 series have 2:1 wide input voltage of 4.5~9, 9~18, 18~36 and 36~75VDC and features 3000VDC of isolation, short-circuit protection.

TECHNICAL SPECIFICATION

All specifications are typical at nominal input, full load and 25ºC otherwise noted

OUTPUT SPECIFICATIONS			
Output power			3 Watts, max.
Voltage accuracy			± 1%
Minimum load			0%
Line regulation	LL to HL at Full Load		± 0.2%
Load regulation	No load to Full load	Single	±1.0%
		Dual	±1.0%
	10% load to 90% load	Single	±0.5%
		Dual	±0.8%
Cross regulation (Dual)	Asymmetrical load 25%/100% FL		±5%
Ripple and noise	20MHz bandwidth		See table
Temperature coefficient			±0.02% / ºC, max.
Transient response recovery time	25% load step change		250µS, typ.
Short circuit protection			Continuous, automatics recovery

GENERAL SPECIFICATIONS		
Efficiency		See table
Isolation voltage	Standard	1600VDC, min.1 minute
	Suffix "H"	3000VDC, min.1 minute
Isolation resistance		10^9 ohms, min.
Isolation capacitance	Standard	50pF, max.
	Suffix "H"	50pF, max.
Switching frequency		100KHz, min.
Approvals and standard		IEC60950-1, UL60950-1, EN60950-1
Dimensions		0.74 x 0.50 x 0.33 Inch (18.9 X 12.8 X 8.4 mm)
Weight		4.5g(0.16oz)
MTBF(Note 1)	BELLCORE TR-NWT-000332	4.386 x 10^6 hrs
	MIL-HDBK-217F	2.401 x 10^6 hrs

EMC CHARACTERISTICS				
EMI (Note 6)	EN55022			Class A
ESD	EN61000-4-2	Air	± 8KV	Perf. Criteria A
		Contact	± 6KV	
Radiated immunity	EN61000-4-3		10 V/m	Perf. Criteria A
Fast transient (Note 7)	EN61000-4-4		± 2KV	Perf. Criteria A
Surge (Note 7)	EN61000-4-5		± 1KV	Perf. Criteria A
Conducted immunity	EN61000-4-6		10 Vr.m.s	Perf. Criteria A

INPUT SPECIFICATIONS			
Input voltage range	5V nominal input		4.5 ~ 9VDC
	12V nominal input		9 ~ 18VDC
	24V nominal input		18 ~ 36VDC
	48V nominal input		36 ~ 75VDC
Input filter			Capacitor type
Input surge voltage	5V input		15VDC 1sec, max
	12V input		25VDC 1sec, max
	24V input		50VDC 1sec, max
	48V input		100VDC 1sec, max
Input reflected ripple current(Note 6)	5V input		80mAp-p
	12V input		40mAp-p
	24V input		30mAp-p
	48V input		20mAp-p
Start up time	Nominal input and constant resistive load	Power up	5mS
		Remote ON/OFF	5mS
Remote ON/OFF	DC-DC ON		Open or high impedance
	DC-DC OFF		Control pin applied current 2 ~ 4mA max(via 1KΩ)
Remote off state input current	Nominal input		2.5mA, max.

Application circuit:

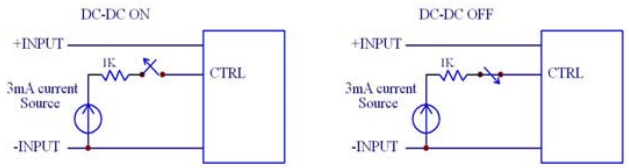

ENVIRONMENTAL SPECIFICATIONS	
Operating ambient temperature	-40ºC ~ +71ºC (without derating) +71ºC ~ +85ºC (with derating)
Storage temperature range	-55ºC ~ +125ºC
Thermal shock	MIL-STD-810F
Vibration	MIL-STD-810F
Relative humidity(non-condensing)	5% to 90% RH
Lead-free reflow solder process	IPC J-STD-020D
Moisture sensitivity level(MSL)	IPC J-STD-033B Level 2a

POWER MATE TECHNOLOGY CO.,LTD.

P-DUKE

3WATTS DC-DC CONVERTER

Model Number	Input Range	Output Voltage	Output Current		Output [4] Ripple & Noise	Input Current		Eff [4] (%)	Capacitor [5] Load max
			Min. load	Full load		No load[3]	Full load[2]		
PDS(H)03-05S3P3	4.5 ~ 9 VDC	3.3 VDC	0mA	700mA	30 mVp-p	40mA	650mA	75	3300uF
PDS(H)03-05S05	4.5 ~ 9 VDC	5 VDC	0mA	600mA	30 mVp-p	40mA	800mA	79	1680uF
PDS(H)03-05S09	4.5 ~ 9 VDC	9 VDC	0mA	333mA	30 mVp-p	40mA	800mA	79	1000uF
PDS(H)03-05S12	4.5 ~ 9 VDC	12 VDC	0mA	250mA	30 mVp-p	40mA	790mA	80	820uF
PDS(H)03-05S15	4.5 ~ 9 VDC	15 VDC	0mA	200mA	30 mVp-p	50mA	780mA	81	680uF
PDS(H)03-05D05	4.5 ~ 9 VDC	±5 VDC	0mA	±300mA	30 mVp-p	50mA	790mA	80	±1000uF
PDS(H)03-05D12	4.5 ~ 9 VDC	±12 VDC	0mA	±125mA	30 mVp-p	50mA	790mA	80	±470uF
PDS(H)03-05D15	4.5 ~ 9 VDC	±15 VDC	0mA	±100mA	30 mVp-p	55mA	780mA	81	±330uF
PDS(H)03-12S3P3	9 ~ 18 VDC	3.3 VDC	0mA	700mA	30 mVp-p	30mA	267mA	76	3300uF
PDS(H)03-12S05	9 ~ 18 VDC	5 VDC	0mA	600mA	30 mVp-p	30mA	324mA	81	1680uF
PDS(H)03-12S09	9 ~ 18 VDC	9 VDC	0mA	333mA	30 mVp-p	30mA	329mA	80	1000uF
PDS(H)03-12S12	9 ~ 18 VDC	12 VDC	0mA	250mA	30 mVp-p	30mA	320mA	82	820uF
PDS(H)03-12S15	9 ~ 18 VDC	15 VDC	0mA	200mA	30 mVp-p	30mA	320mA	82	680uF
PDS(H)03-12D05	9 ~ 18 VDC	±5 VDC	0mA	±300mA	30 mVp-p	30mA	329mA	80	±1000uF
PDS(H)03-12D12	9 ~ 18 VDC	±12 VDC	0mA	±125mA	30 mVp-p	30mA	320mA	82	±470uF
PDS(H)03-12D15	9 ~ 18 VDC	±15 VDC	0mA	±100mA	30 mVp-p	30mA	316mA	83	±330uF
PDS(H)03-24S3P3	18 ~ 36 VDC	3.3 VDC	0mA	700mA	30 mVp-p	13mA	134mA	76	3300uF
PDS(H)03-24S05	18 ~ 36 VDC	5 VDC	0mA	600mA	30 mVp-p	13mA	162mA	81	1680uF
PDS(H)03-24S09	18 ~ 36 VDC	9 VDC	0mA	333mA	30 mVp-p	13mA	160mA	82	1000uF
PDS(H)03-24S12	18 ~ 36 VDC	12 VDC	0mA	250mA	30 mVp-p	13mA	160mA	82	820uF
PDS(H)03-24S15	18 ~ 36 VDC	15 VDC	0mA	200mA	30 mVp-p	13mA	158mA	83	680uF
PDS(H)03-24D05	18 ~ 36 VDC	±5 VDC	0mA	±300mA	30 mVp-p	13mA	164mA	80	±1000uF
PDS(H)03-24D12	18 ~ 36 VDC	±12 VDC	0mA	±125mA	30 mVp-p	13mA	158mA	83	±470uF
PDS(H)03-24D15	18 ~ 36 VDC	±15 VDC	0mA	±100mA	30 mVp-p	13mA	158mA	83	±330uF
PDS(H)03-48S3P3	36 ~ 75 VDC	3.3 VDC	0mA	700mA	30 mVp-p	10mA	67mA	76	3300uF
PDS(H)03-48S05	36 ~ 75 VDC	5 VDC	0mA	600mA	30 mVp-p	10mA	81mA	81	1680uF
PDS(H)03-48S09	36 ~ 75 VDC	9 VDC	0mA	333mA	30 mVp-p	10mA	82mA	80	1000uF
PDS(H)03-48S12	36 ~ 75 VDC	12 VDC	0mA	250mA	30 mVp-p	10mA	80mA	82	820uF
PDS(H)03-48S15	36 ~ 75 VDC	15 VDC	0mA	200mA	30 mVp-p	10mA	80mA	82	680uF
PDS(H)03-48D05	36 ~ 75 VDC	±5 VDC	0mA	±300mA	30 mVp-p	10mA	81mA	81	±1000uF
PDS(H)03-48D12	36 ~ 75 VDC	±12 VDC	0mA	±125mA	30 mVp-p	10mA	79mA	83	±470uF
PDS(H)03-48D15	36 ~ 75 VDC	±15 VDC	0mA	±100mA	30 mVp-p	10mA	79mA	83	±330uF

Note

1. BELLCORE TR-NWT-000332. Case 1: 50% Stress, Temperature at 40ºC.
   MIL-HDBK-217F Notice2 @Ta=25 ºC, Full load(Ground, Benign, controlled environment)
2. Maximum value at nominal input and full load.
3. Typical value at nominal input and no load.
4. Typical value at nominal input and full load.
5. Test by minimum input and constant resistive load.
6. The PDS(H)03 series meet EN55022 Class A and input reflected ripple current with external L-C filter before the input pins to the converter. (Connect networks following Class B figure.)
   Recommend: 5VDC input: C1=4.7uF/25V 1812 MLCC, C3=220pF/3KV 1808 MLCC, L1=10uH 0504 SMD Inductor P/N:PMT-047.
   12VDC input: C1=6.8uF/50V 1812 MLCC, C3=220pF/3KV 1808 MLCC, L1=12uH 0504 SMD Inductor P/N:PMT-062.
   24VDC input: C1=4.7uF/50V 1812 MLCC, C3=220pF/3KV 1808 MLCC, L1=10uH 0504 SMD Inductor P/N:PMT-047.
   48VDC input: C1=4.7uF/100V 1812 MLCC, C3=220pF/3KV 1808 MLCC, L1=10uH 0504 SMD Inductor P/N:PMT-047.
7. An external input filter capacitor is required if the module has to meet EN61000-4-4, EN61000-4-5.
   The filter capacitor Power Mate suggest: Nippon chemi-con KY series, 220μF/100V, ESR 48mΩ.

CAUTION: This power module is not internally fused. An input line fuse must always be used.

PDS03-24S05 Derating Curve

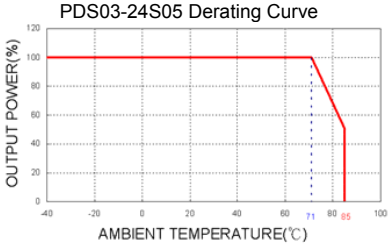

PDS03-24S05 Efficiency VS Input Voltage

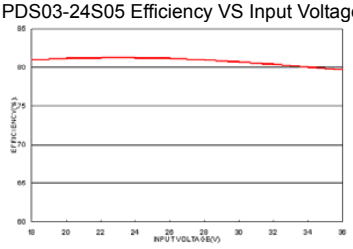

PDS03-24S05 Efficiency VS Output Load

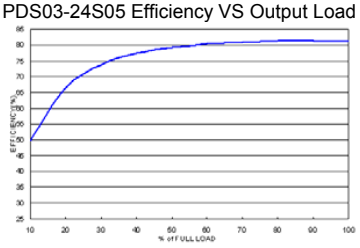

Supporting your great ideas www.pewatron.com PEWATRON a member of the Angst + Pfister Group

POWER MATE TECHNOLOGY CO.,LTD.

3WATTS DC-DC CONVERTER

Mechanical Drawing:

SMD TYPE

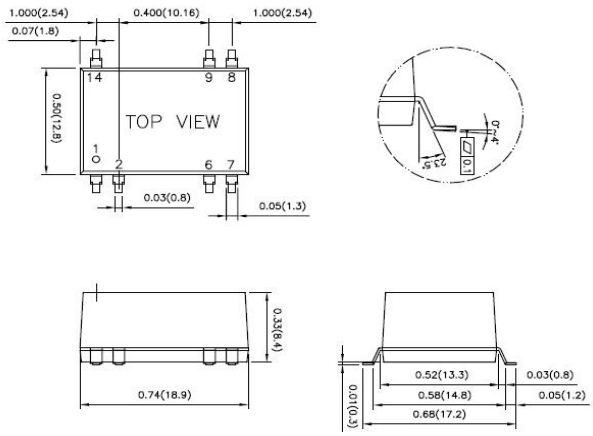

DIP TYPE

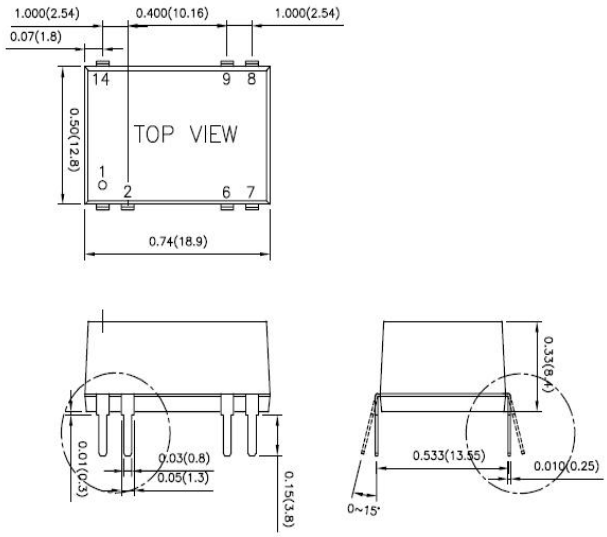

1. All dimensions in Inch (mm)
   Tolerance: X.XX±0.02 (X.X±0.5)
   X.XXX±0.01 (X.XX±0.25)
2. Pin pitch tolerance ±0.01(0.25)
3. Pin dimension tolerance ±0.004 (0.1)

Recommend EMI Filter:

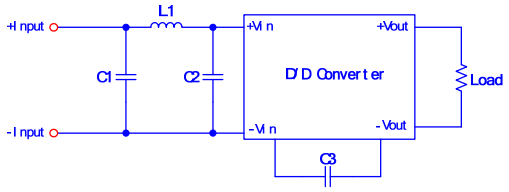

Recommended Filter for EN55022 Class B Compliance

The components used in the above figure, together with the manufacturers' part numbers for these components, are as follows:

	C1	C2	C3	L1
PDS(H)03-05xxx	6.8μF/25V 1812 MLCC	N/A	220pF/3KV 1808 MLCC	10μH 0504 SMD Inductor PMT-047
PDS(H)03-12xxx	4.7μF/50V 1812 MLCC	4.7μF/50V 1812 MLCC	220pF/3KV 1808 MLCC	12μH 0504 SMD Inductor PMT-062
PDS(H)03-24xxx	4.7μF/50V 1812 MLCC	4.7μF/50V 1812 MLCC	220pF/3KV 1808 MLCC	18μH 0504 SMD Inductor PMT-046
PDS(H)03-48xxx	4.7μF/100V 1812 MLCC	4.7μF/100V 1812 MLCC	220pF/3KV 1808 MLCC	18μH 0504 SMD Inductor PMT-046

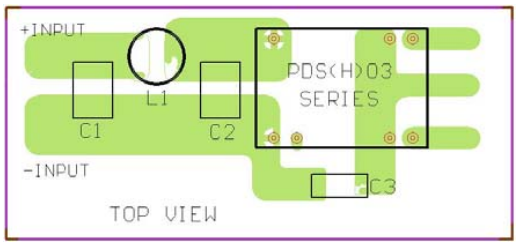

Recommended EN55022 Class B Filter Circuit Layout

PIN CONNECTION		
PIN	SINGLE	DUAL
1	- INPUT	- INPUT
2	ON/OFF	ON/OFF
6	NC	COMMON
7	NC	-OUTPUT
8	+OUTPUT	+OUTPUT
9	-OUTPUT	COMMON
14	+ INPUT	+ INPUT

Supporting your great ideas www.pewatron.com PEWATRON a member of the Angst + Pfister Group

PEWATRON
a member of the Angst + Pfister Group

We are here for you. Addresses and Contacts

Sales Switzerland

Postcode 3000 – 9999
Liechtenstein

Matthias Rüegg
Ruhbergstrasse 32
CH-9230 Flawil

Phone + 41 44 877 35 18
Mobile + 41 76 491 66 66
Fax + 41 44 877 35 19

matthias.rueegg@pewatron.com

Postcode 1000 – 2999

Raffael Favaretto
Route d'Oron 124
CH-1673 Promasens

Phone + 41 44 877 35 22
Mobile + 41 76 444 63 14
Fax + 41 44 877 35 23

raffael.favaretto@pewatron.com

Sales Germany

Postcode 60000 – 79999

Dieter Hirthe
Mühlweg 23
D-71554 Weissach i.T.

Phone + 49 719 149 60 58
Mobile + 49 163 762 74 30
Fax + 49 719 193 31 88

dieter.hirthe@pewatron.com

Postcode 10000 – 59999
Postcode 80000 – 99999

Kurt Stritzelberger
Neumarkter Str. 86a
D-81673 Munich

Phone + 49 89 260 38 47
Mobile + 49 171 803 41 35
Fax + 49 89 43 10 91 91

kurt.stritzelberger@pewatron.com

Key Accounts
Aerospace and Defence

Claus Wübbena
Vogelkamp 26
D-26655 Westerstede

Phone + 49 4488 5204 614
Mobile + 49 173 9700 691
Fax + 49 4488 5204 616

claus.wuebbena@pewatron.com

Sales Austria

Kurt Stritzelberger
Neumarkter Str. 86a
D-81673 Munich

Phone + 49 89 260 38 47
Mobile + 49 17 18 03 41 35
Fax + 49 89 43 10 91 91

kurt.stritzelberger@pewatron.com

Sales Other Countries / Product Management

Sensors

Physical Sensors
Data Acquisition

Peter Felder
Phone + 41 44 877 35 05
peter.felder@pewatron.com

Geometrical Sensors

Eric Letsch
Phone + 41 44 877 35 14
eric.letsch@pewatron.com

Power Supplies

DC-DC Converters
Switching Power Supplies
DC-AC Inverters

Sebastiano Leggio
Phone + 41 44 877 35 06
sebastiano.leggio@pewatron.com

E-Components

Current Sensors
Man Machine Interface
Measurement Probes

Sebastiano Leggio
Phone + 41 44 877 35 06
sebastiano.leggio@pewatron.com

PEWATRON AG
Thurgauerstrasse 66
CH-8052 Zurich

Phone + 41 44 877 35 00
Fax + 41 44 877 35 25

www.pewatron.com
info@pewatron.com