POWER MATE TECHNOLOGY CO.,LTD.

PDS(H)02W SERIES

FEATURES

- 2 WATTS MAXIMUM OUTPUT POWER
- SMD AND DIP PACKAGE, 0.74 x 0.50 x 0.33 INCH
- SMD PACKAGE QUALIFIED FOR LEADFREE REFLOW SOLDER PROCESS ACCORDING IPC J-STD-020D
- 4:1 ULTRA WIDE INPUT VOLTAGE RANGE
- HIGH EFFICIENCY UP TO 82%
- INPUT TO OUTPUT ISOLATION: 1600VDC
- LOW RIPPLE & NOISE
- EXTERNAL ON/OFF CONTROL
- SWITCHING FREQUENCY (100KHz, MIN)
- CONTINUOUS SHORT CIRCUIT PROTECTION
- UL94-V0 PACKAGE MATERIALS
- CE MARK MEETS 2006/95/EC, 93/68/EEC AND 2004/108/EC
- UL60950-1, EN60950-1 AND IEC60950-1 LICENSED
- COMPLIANT TO RoHS EU DIRECTIVE 2002/95/EC

APPLICATIONS

Wireless Network
Telecom/Datacom
Industry Control System
Measurement Equipment
Semiconductor Equipment

OPTIONS

3000VDC ISOLATION

DESCRIPTION

The PDS02W(SMD type), PDH02W(DIP type) offer 2 watts of output power from a 0.74 x 0.50 x 0.33 inch package without derating to 85ºC. The PDS(H)02W series have 4:1 ultra wide input voltage of 4.5~18, 9~36, and 18~75VDC and features 3000VDC of isolation, short-circuit protection.

TECHNICAL SPECIFICATION

All specifications are typical at nominal input, full load and 25ºC otherwise noted

OUTPUT SPECIFICATIONS			
Output power			2 Watts, max.
Voltage accuracy			± 1%
Minimum load			0%
Line regulation	LL to HL at Full Load		± 0.2%
Load regulation	No load to Full load	Single	±1.0%
		Dual	±1.0%
	10% load to 90% load	Single	±0.5%
		Dual	±0.8%
Cross regulation (Dual)	Asymmetrical load 25%/100% FL		±5%
Ripple and noise	20MHz bandwidth		See table
Temperature coefficient			±0.02% / ºC, max.
Transient response recovery time	25% load step change		250µS
Short circuit protection			Continuous, automatics recovery

GENERAL SPECIFICATIONS		
Efficiency		See table
Isolation voltage	Standard	1600VDC, min. 1minute
	Suffix "H"	3000VDC, min. 1minute
Isolation resistance		10^9 ohms, min.
Isolation capacitance	Standard	50pF, max.
	Suffix "H"	50pF, max.
Switching frequency		100KHz, min.
Approvals and standard		IEC60950-1, UL60950-1, EN60950-1
Dimensions		0.74 x 0.50 x 0.33 Inch (18.9 X 12.8 X 8.4 mm)
Weight		4.5g(0.16oz)
MTBF(Note 1)	BELLCORE TR-NWT-000332	4.615×10^6 hrs
	MIL-HDBK-217F	2.052×10^6 hrs

EMC CHARACTERISTICS				
EMI (Note 6)	EN55022			Class A
ESD	EN61000-4-2	Air	± 8KV	Perf. Criteria A
		Contact	± 6KV	
Radiated immunity	EN61000-4-3		10 V/m	Perf. Criteria A
Fast transient (Note 7)	EN61000-4-4		± 2KV	Perf. Criteria A
Surge (Note 7)	EN61000-4-5		± 1KV	Perf. Criteria A
Conducted immunity	EN61000-4-6		10 Vr.m.s	Perf. Criteria A

INPUT SPECIFICATIONS			
Input voltage range	12VDC nominal input		4.5 ~ 18VDC
	24VDC nominal input		9 ~ 36VDC
	48VDC nominal input		18 ~ 75VDC
Input filter			Capacitor type
Input surge voltage	12VDC input		25VDC 1sec, max.
	24VDC input		50VDC 1sec, max.
	48VDC input		100VDC 1sec, max.
Input reflected ripple current(Note 6)	12VDC input		80mAp-p
	24VDC input		40mAp-p
	48VDC input		30mAp-p
Start up time	Nominal input and constant resistive load	Power up	5mS
		Remote ON/OFF	5mS
Remote ON/OFF	DC-DC ON		Open or high impedance
	DC-DC OFF		Control pin applied current 2 ~ 4mA max(via 1KΩ)
Remote off state input current	Nominal input		2.5mA, max.

Application circuit:

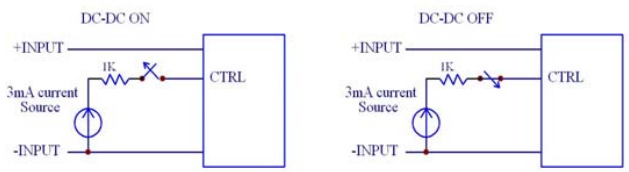

ENVIRONMENTAL SPECIFICATIONS	
Operating ambient temperature	-40ºC ~ +85ºC (non-derating)
Storage temperature range	-55ºC ~ +125ºC
Thermal shock	MIL-STD-810F
Vibration	MIL-STD-810F
Relative humidity(non-condensing)	5% to 90% RH
Lead-free reflow solder process	IPC J-STD-020D
Moisture sensitivity level(MSL)	IPC J-STD-033B Level 2a

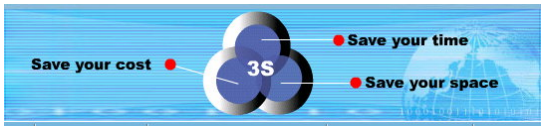

POWER MATE TECHNOLOGY CO.,LTD.

P-DUKE

2 WATTS DC-DC CONVERTER

Model Number	Input Range	Output Voltage	Output Current		Output [4] Ripple & Noise	Input Current		Eff [4] (%)	Capacitor [5] Load max
			Min. load	Full load		No load[3]	Full load[2]		
PDS02-12S3P3W	4.5 ~ 18 VDC	3.3 VDC	0mA	500mA	30mVp-p	30mA	196mA	74	3300uF
PDS02-12S05W	4.5 ~ 18 VDC	5 VDC	0mA	400mA	30mVp-p	30mA	222mA	79	1680uF
PDS02-12S09W	4.5 ~ 18 VDC	9 VDC	0mA	222mA	30mVp-p	30mA	222mA	79	1000uF
PDS02-12S12W	4.5 ~ 18 VDC	12 VDC	0mA	167mA	30mVp-p	30mA	219mA	80	820uF
PDS02-12S15W	4.5 ~ 18 VDC	15 VDC	0mA	134mA	30mVp-p	35mA	216mA	81	680uF
PDS02-12D05W	4.5 ~ 18 VDC	±5 VDC	0mA	±200mA	30mVp-p	35mA	231mA	76	±1000uF
PDS02-12D12W	4.5 ~ 18 VDC	±12 VDC	0mA	±83mA	30mVp-p	35mA	216mA	81	±470uF
PDS02-12D15W	4.5 ~ 18 VDC	±15 VDC	0mA	±67mA	30mVp-p	35mA	216mA	81	±330uF
PDS02-24S3P3W	9 ~ 36 VDC	3.3 VDC	0mA	500mA	30mVp-p	20mA	98mA	74	3300uF
PDS02-24S05W	9 ~ 36 VDC	5 VDC	0mA	400mA	30mVp-p	20mA	111mA	79	1680uF
PDS02-24S09W	9 ~ 36 VDC	9 VDC	0mA	222mA	30mVp-p	20mA	111mA	79	1000uF
PDS02-24S12W	9 ~ 36 VDC	12 VDC	0mA	167mA	30mVp-p	20mA	110mA	80	820uF
PDS02-24S15W	9 ~ 36 VDC	15 VDC	0mA	134mA	30mVp-p	20mA	107mA	82	680uF
PDS02-24D05W	9 ~ 36 VDC	±5 VDC	0mA	±200mA	30mVp-p	20mA	116mA	76	±1000uF
PDS02-24D12W	9 ~ 36 VDC	±12 VDC	0mA	±83mA	30mVp-p	20mA	110mA	80	±470uF
PDS02-24D15W	9 ~ 36 VDC	±15 VDC	0mA	±67mA	30mVp-p	20mA	108mA	81	±330uF
PDS02-48S3P3W	18 ~ 75 VDC	3.3 VDC	0mA	500mA	30mVp-p	10mA	49mA	74	3300uF
PDS02-48S05W	18 ~ 75 VDC	5 VDC	0mA	400mA	30mVp-p	10mA	56mA	78	1680uF
PDS02-48S09W	18 ~ 75 VDC	9 VDC	0mA	222mA	30mVp-p	10mA	56mA	79	1000uF
PDS02-48S12W	18 ~ 75 VDC	12 VDC	0mA	167mA	30mVp-p	10mA	54mA	81	820uF
PDS02-48S15W	18 ~ 75 VDC	15 VDC	0mA	134mA	30mVp-p	10mA	53mA	82	680uF
PDS02-48D05W	18 ~ 75 VDC	±5 VDC	0mA	±200mA	30mVp-p	10mA	58mA	76	±1000uF
PDS02-48D12W	18 ~ 75 VDC	±12 VDC	0mA	±83mA	30mVp-p	10mA	54mA	81	±470uF
PDS02-48D15W	18 ~ 75 VDC	±15 VDC	0mA	±67mA	30mVp-p	10mA	54mA	81	±330uF

Note

1. BELLCORE TR-NWT-000332. Case 1: 50% Stress, Temperature at 40ºC.
   MIL-HDBK-217F Notice2 @Ta=25 ºC, Full load(Ground, Benign, controlled environment)
2. Maximum value at nominal input and full load.
3. Typical value at nominal input and no load.
4. Typical value at nominal input and full load.
5. Test by minimum input and constant resistive load.
6. The PDS(H)02W series meet EN55022 Class A and input reflected ripple current with external L-C filter before the input pins to the converter. (Connect networks following Class B figure.)
   Recommend:
   12VDC input: C1= 10uF/25V 1812 MLCC, C3=220pF/3KV 1808 MLCC, L1=2.2uH 0504 SMD Inductor P/N:PMT-059.
   24VDC input: C1=6.8uF/50V 1812 MLCC, C3=220pF/3KV 1808 MLCC, L1=18μH 0504 SMD Inductor P/N:PMT-046.
   48VDC input: C1=4.7μF/100V 1812 MLCC, C3=220pF/3KV 1808 MLCC, L1=18μH 0504 SMD Inductor P/N:PMT-046.
7. An external input filter capacitor is required if the module has to meet EN61000-4-4, EN61000-4-5.
   The filter capacitor Power Mate suggest: Nippon chemi-con KY series, 220μF/100V, ESR 48mΩ.

CAUTION: This power module is not internally fused. An input line fuse must always be used.

PDS02-48S05W Efficiency VS Input Voltage

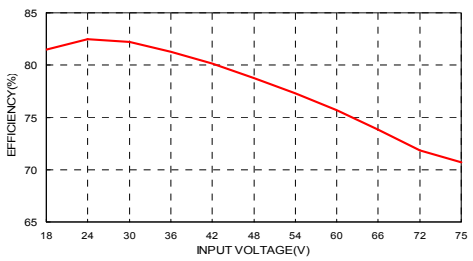

PDS02-48S05W Efficiency VS Output Load

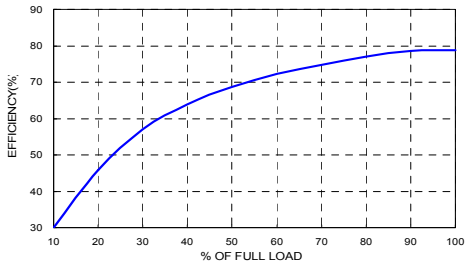

Supporting your great ideas www.pewatron.com PEWATRON a member of the Angst + Pfister Group

POWER MATE TECHNOLOGY CO.,LTD.

2 WATTS DC-DC CONVERTER

Mechanical Drawing:

SMD TYPE

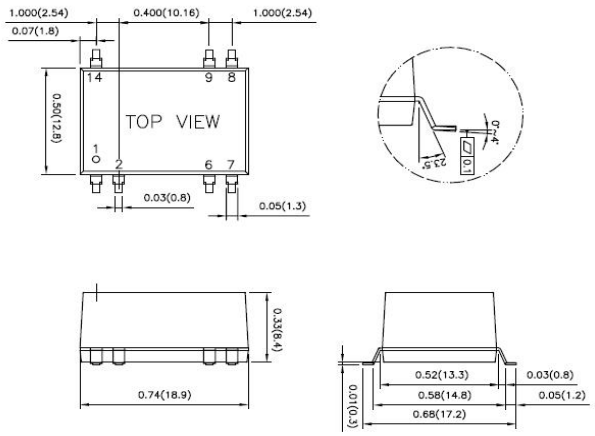

DIP TYPE

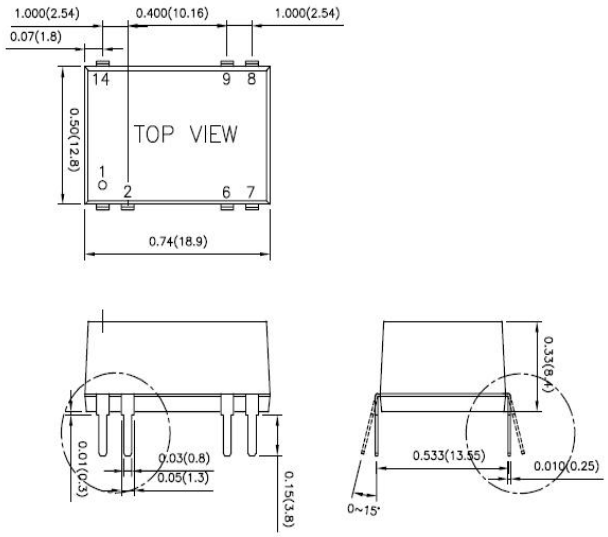

1. All dimensions in Inch (mm)
   Tolerance: X.XX±0.02 (X.X±0.5)
   X.XXX±0.01 (X.XX±0.25)
2. Pin pitch tolerance ±0.01(0.25)
3. Pin dimension tolerance ±0.004 (0.1)

Recommended EMI Filter:

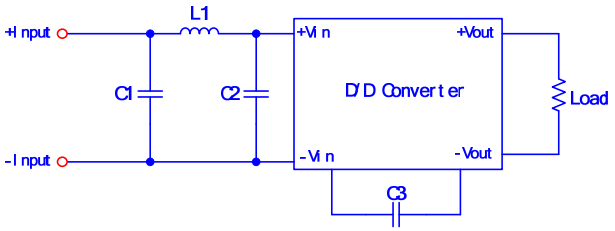

Recommended Filter for EN55022 Class B Compliance

The components used in the above figure, together with the manufacturers' part numbers for these components, are as follows:

	C1、C2	C3	L1
PDS(H)02-12xxxW	10μF/25V 1812 MLCC	220pF/3KV 1808 MLCC	2.2μH 0504 SMD Inductor PMT-059
PDS(H)02-24xxxW	2.2μF/50V 1812 MLCC	220pF/3KV 1808 MLCC	18μH 0504 SMD Inductor PMT-046
PDS(H)02-48xxxW	2.2μF/100V 1812 MLCC	220pF/3KV 1808 MLCC	27μH 0504 SMD Inductor PMT-

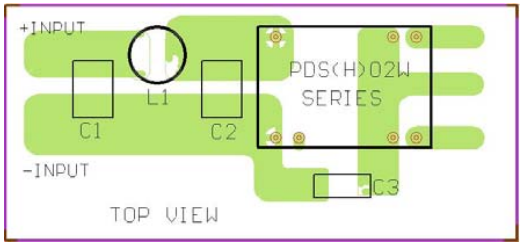

Recommended EN55022 Class B Filter Circuit Layout

PIN CONNECTION		
PIN	SINGLE	DUAL
1	- INPUT	- INPUT
2	ON/OFF	ON/OFF
6	NC	COMMON
7	NC	-OUTPUT
8	+OUTPUT	+OUTPUT
9	-OUTPUT	COMMON
14	+ INPUT	+ INPUT

Supporting your great ideas www.pewatron.com PEWATRON a member of the Angst + Pfister Group

PEWATRON
a member of the Angst + Pfister Group

We are here for you. Addresses and Contacts

Sales Switzerland

Postcode 3000 – 9999
Liechtenstein

Matthias Rüegg
Ruhbergstrasse 32
CH-9230 Flawil

Phone + 41 44 877 35 18
Mobile + 41 76 491 66 66
Fax + 41 44 877 35 19

matthias.rueegg@pewatron.com

Postcode 1000 – 2999

Raffael Favaretto
Route d'Oron 124
CH-1673 Promasens

Phone + 41 44 877 35 22
Mobile + 41 76 444 63 14
Fax + 41 44 877 35 23

raffael.favaretto@pewatron.com

Sales Germany

Postcode 60000 – 79999

Dieter Hirthe
Mühlweg 23
D-71554 Weissach i.T.

Phone + 49 719 149 60 58
Mobile + 49 163 762 74 30
Fax + 49 719 193 31 88

dieter.hirthe@pewatron.com

Postcode 10000 – 59999
Postcode 80000 – 99999

Kurt Stritzelberger
Neumarkter Str. 86a
D-81673 Munich

Phone + 49 89 260 38 47
Mobile + 49 171 803 41 35
Fax + 49 89 43 10 91 91

kurt.stritzelberger@pewatron.com

Key Accounts
Aerospace and Defence

Claus Wübbena
Vogelkamp 26
D-26655 Westerstede

Phone + 49 4488 5204 614
Mobile + 49 173 9700 691
Fax + 49 4488 5204 616

claus.wuebbena@pewatron.com

Sales Austria

Kurt Stritzelberger
Neumarkter Str. 86a
D-81673 Munich

Phone + 49 89 260 38 47
Mobile + 49 17 18 03 41 35
Fax + 49 89 43 10 91 91

kurt.stritzelberger@pewatron.com

Sales Other Countries / Product Management

Sensors

Physical Sensors
Data Acquisition

Peter Felder
Phone + 41 44 877 35 05
peter.felder@pewatron.com

Geometrical Sensors

Eric Letsch
Phone + 41 44 877 35 14
eric.letsch@pewatron.com

Power Supplies

DC-DC Converters
Switching Power Supplies
DC-AC Inverters

Sebastiano Leggio
Phone + 41 44 877 35 06
sebastiano.leggio@pewatron.com

E-Components

Current Sensors
Man Machine Interface
Measurement Probes

Sebastiano Leggio
Phone + 41 44 877 35 06
sebastiano.leggio@pewatron.com

PEWATRON AG
Thurgauerstrasse 66
CH-8052 Zurich

Phone + 41 44 877 35 00
Fax + 41 44 877 35 25

www.pewatron.com
info@pewatron.com