# 100W Modified Sine Wave DC-AC Power Inverter A301/302-100 series

■ Features :

- Built-in USB interface
- Cooling by free air convection(without fan)
- Slim size can fit in with the cup holder on vehicles
- High efficiency up to 90%
- 12V or 24V DC input
- Input voltage range: -15% ~ +25%
- Output voltage regulation:±10%
- Protections: Input reverse polarity/Bat. Low shutdown/Over voltage/ Over load/Over temperature/Output short
- Output waveform: Modified sine wave
- Topology: Microprocessor
- Approvals: e13/ CE
- 1 year warranty

e 13 CE

## SPECIFICATION

| ORDER NO. | | A301-100-F3 | A302-100-F3 |
|---|---|---|---|
| OUTPUT | SAFETY MODEL NO. | A-100-150W(N) | |
| | AC RATED VOLTAGE Note.1 | 230V | |
| | RATED POWER | 100W | |
| | SURGE POWER | 200W | |
| | WAVEFORM | Modified Sine Wave | |
| | FREQUENCY | 50Hz±1% | |
| | AC REGULATION | ±10% | ±10% |
| | STANDARD RECEPTACLES | Europe*1ea | |
| | LED INDICATOR | Dual-color indicator display for power on / failure status | |
| | USB POWER | 5VDC / 500mA (max.) | 5VDC / 300mA (max.) |
| INPUT | DC CURRENT | 15A | 10A |
| | NO LOAD CURRENT DRAW | 0.25A | 0.2A |
| | DC VOLTAGE | 12V | 24V |
| | VOLTAGE RANGE | 10 ~ 15VDC | 21 ~ 30VDC |
| | EFFICIENCY (Typ.) | 90% | |
| | DC CONNECTOR | 650±50mm Cigarette plug*1ea | |
| | FUSE | 15A* 1ea | 10A* 1ea |
| PROTECTION | BAT. LOW SHUTDOWN | 10±0.5V | 19.5±1V |
| | OVER VOLTAGE | 15 ~ 17V | 30 ~ 32V |
| | OVER TEMPERATURE | 60±5℃ / 140±9°F (case) | |
| | OUTPUT SHORT | Shut-off | |
| | REVERSE. POLARITY | By fuse open | |
| ENVIRONMENT | WORKING TEMP. | 0 ~ +30℃@100% load, 40℃@ 50% load | |
| | WORKING HUMIDITY | 20% ~ 90% RH non-condensing | |
| | STORAGE TEMP., HUMIDITY | -30 ~ +70℃ / -22 ~ +158°F, 10 ~ 95% RH | |
| | TEMP. COEFFICIENT | ±0.05% / ℃ (0 ~ 50℃) | |
| SAFETY & EMC | ISOLATION RESISTANCE | I/P-O/P:100M Ohms min./ 500VDC / 25℃/ 70% RH | |
| | EMI CONDUCTION & RADIATION | Compliance to EN55022 class B, 72/ 245/ CEE, 2006/96/CE | |
| | EMS IMMUNITY | Compliance to EN61000-4-2,3 | |
| | LVD | Compliance to EN60950-1 | |
| OTHERS | DIMENSION | φ65*170mm (Diameter*L) | |
| | PACKING | 0.55Kg ; 30pcs / 17.5Kg / CARTON | |
| | COOLING | By air convection | |
| | APPLICATIONS | Home appliance, office and portable equipment and vehicle ...etc. | |
| NOTE | 1. AC rated output voltage is measured at 12.5VDC, 25VDC input voltage. | | |

*File Name: A301/302-100-SPEC 2008-10-30*

MEAN WELL

100W Modified Sine Wave DC-AC Power Inverter **A301/302-100 series**

## ■ Mechanical Specification

Unit:mm

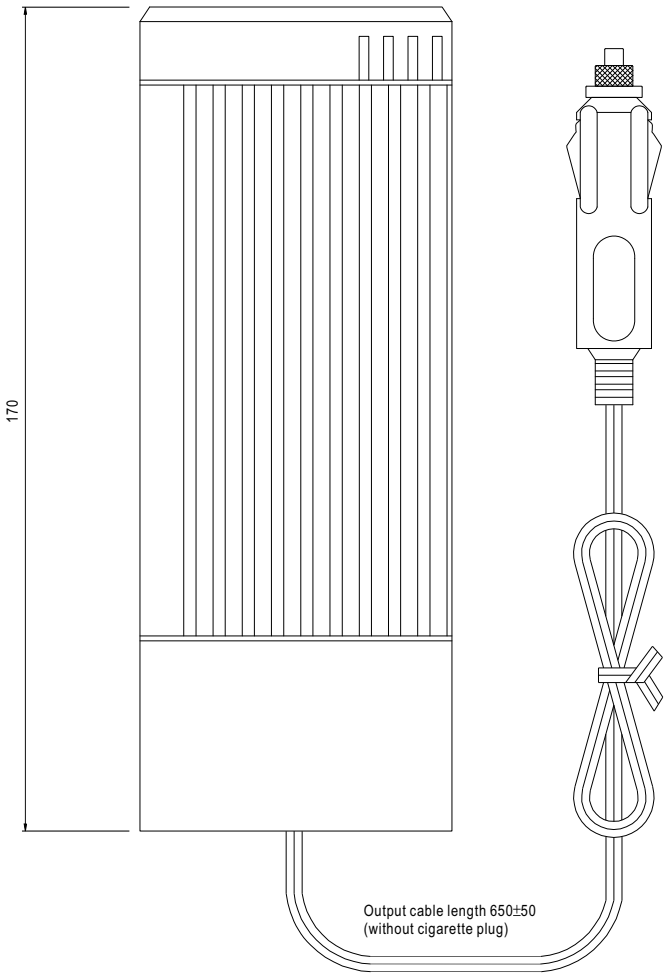


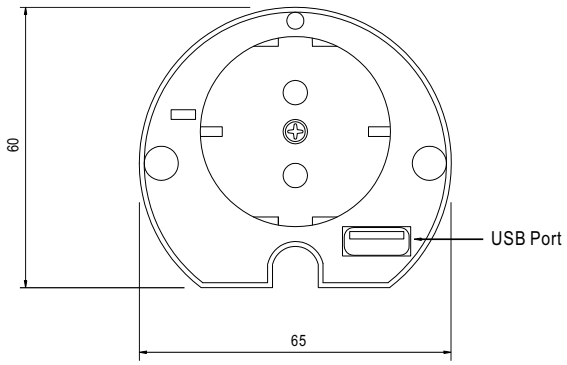


*File Name: A301/302-100-SPEC 2008-10-30*

PEWATRON
a member of the Angst + Pfister Group

# We are here for you. Addresses and Contacts

## Sales Switzerland

Postcode 3000 – 9999
Liechtenstein

Matthias Rüegg
Ruhbergstrasse 32
CH-9230 Flawil

Phone + 41 44 877 35 18
Mobile + 41 76 491 66 66
Fax + 41 44 877 35 19

matthias.rueegg@pewatron.com

Postcode 1000 – 2999

Raffael Favaretto
Route d'Oron 124
CH-1673 Promasens

Phone + 41 44 877 35 22
Mobile + 41 76 444 63 14
Fax + 41 44 877 35 23

raffael.favaretto@pewatron.com

## Sales Germany

Postcode 60000 – 79999

Dieter Hirthe
Mühlweg 23
D-71554 Weissach i.T.

Phone + 49 719 149 60 58
Mobile + 49 163 762 74 30
Fax + 49 719 193 31 88

dieter.hirthe@pewatron.com

Postcode 10000 – 59999
Postcode 80000 – 99999

Kurt Stritzelberger
Neumarkter Str. 86a
D-81673 Munich

Phone + 49 89 260 38 47
Mobile + 49 171 803 41 35
Fax + 49 89 43 10 91 91

kurt.stritzelberger@pewatron.com

Key Accounts
Aerospace and Defence

Claus Wübbena
Vogelkamp 26
D-26655 Westerstede

Phone + 49 4488 5204 614
Mobile + 49 173 9700 691
Fax + 49 4488 5204 616

claus.wuebbena@pewatron.com

## Sales Austria

Kurt Stritzelberger
Neumarkter Str. 86a
D-81673 Munich

Phone + 49 89 260 38 47
Mobile + 49 17 18 03 41 35
Fax + 49 89 43 10 91 91

kurt.stritzelberger@pewatron.com

## Sales Other Countries / Product Management

### Sensors

Physical Sensors
Data Acquisition

Peter Felder
Phone + 41 44 877 35 05
peter.felder@pewatron.com

Geometrical Sensors

Eric Letsch
Phone + 41 44 877 35 14
eric.letsch@pewatron.com

### Power Supplies

DC-DC Converters
Switching Power Supplies
DC-AC Inverters

Sebastiano Leggio
Phone + 41 44 877 35 06
sebastiano.leggio@pewatron.com

### E-Components

Current Sensors
Man Machine Interface
Measurement Probes

Sebastiano Leggio
Phone + 41 44 877 35 06
sebastiano.leggio@pewatron.com

PEWATRON AG
Thurgauerstrasse 66
CH-8052 Zurich

Phone + 41 44 877 35 00
Fax + 41 44 877 35 25

www.pewatron.com
info@pewatron.com