Pre-amplified／5V Excitation／Absolute

XFPM-A Data sheet

■Features

Barometric pressure measurable
On-chip amplification and temperature compensations
Pre-calibration of offset voltage and span
Dual-in-line package (DIP)

■Applications

・Industrial instrumentation
・Medical device
・Barometer, Altimeter
・Altitude compensation

■Part number for ordering

XFPM－115KP A R

- XFPM: Model
- 115: Rated Pressure (kPa)
- A: Pressure type — A：Absolute pressure
- R: Terminal leadsdirection
  - No Mark：
  - R ：

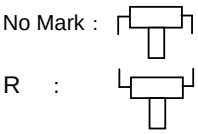

Weight (grams)
1.5

RoHS compliance

Measurable pressure range(kPa･abs)	Part number for ordering	
15～115	XFPM-115KPA	XFPM-115KPAR

■Specifications

Model	XFPM-115KPA ／ XFPM-115KPAR	Unit
Recommended operating conditions		
Pressure type	Absolute pressure	–
Rated pressure	115	kPa･abs
Measurable pressure range	15～115	kPa･abs
Temperature range	0～85	℃
Pressure media	Non-corrosive gases only (No liquid)	–
Supply voltage（constant）	5±0.25	VDC
Absolute maximum rating		
Maximum load pressure	Twice of rated pressure	–
Maximum excitation voltage	8	VDC
Operating temperature	-40～125	℃
Storage temperature	-40～125	℃
Operating humidity	30～80 (Non dew condition)	%RH
Electrical characteristics (Excitation voltage Vcc=5.0V constant ,ambient temperature Ta=25℃)		
Power consumption	10mA max.	mA
Output impedance	10Ω max.	Ω
Source current	0.2mA max.	mA
Sink current	2mA max.	mA
Response time	2 (for the reference)	msec
Output span voltage	4.5	V
Offset voltage *	0.2±0.1125 (at 15 kPa･abs)	V
Output voltage at full scale *	4.7±0.1125 (at 115kPa･abs)	V
Accuracy *	±2.5	%FS/0～85℃

* Excluding input voltage error.

"Tsunagu" Technology Fujikura

Supporting your great ideas www.pewatron.com PEWATRON a member of the Angst + Pfister Group

■Outline dimensions■

Unit : mm

XFPM (Absolute pressure)

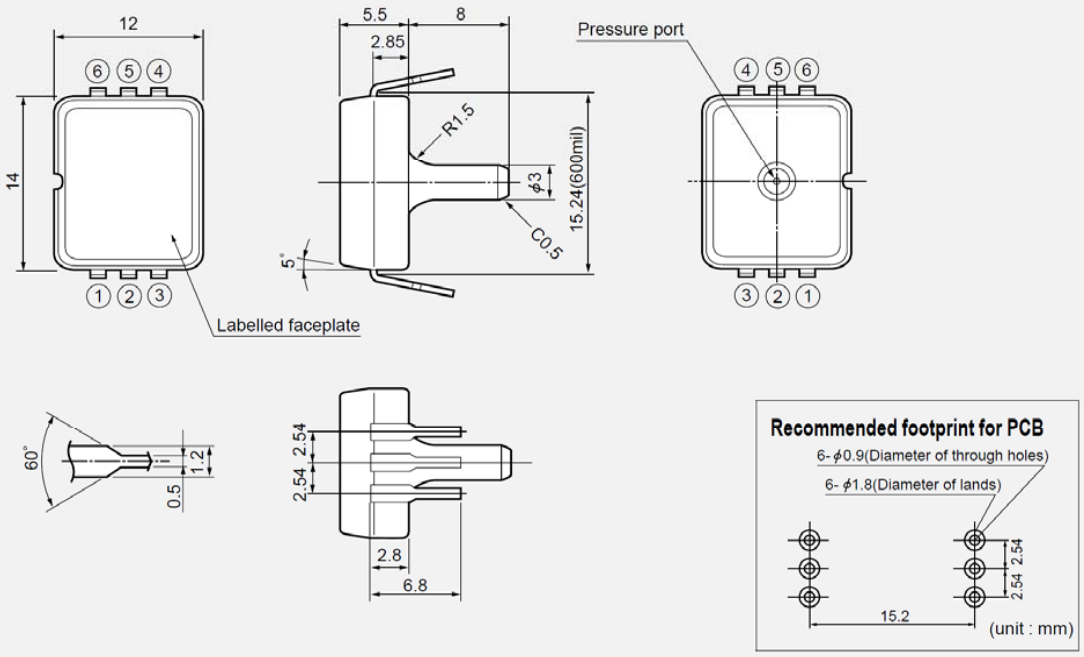

Unit : mm

XFPM-R (Absolute pressure)

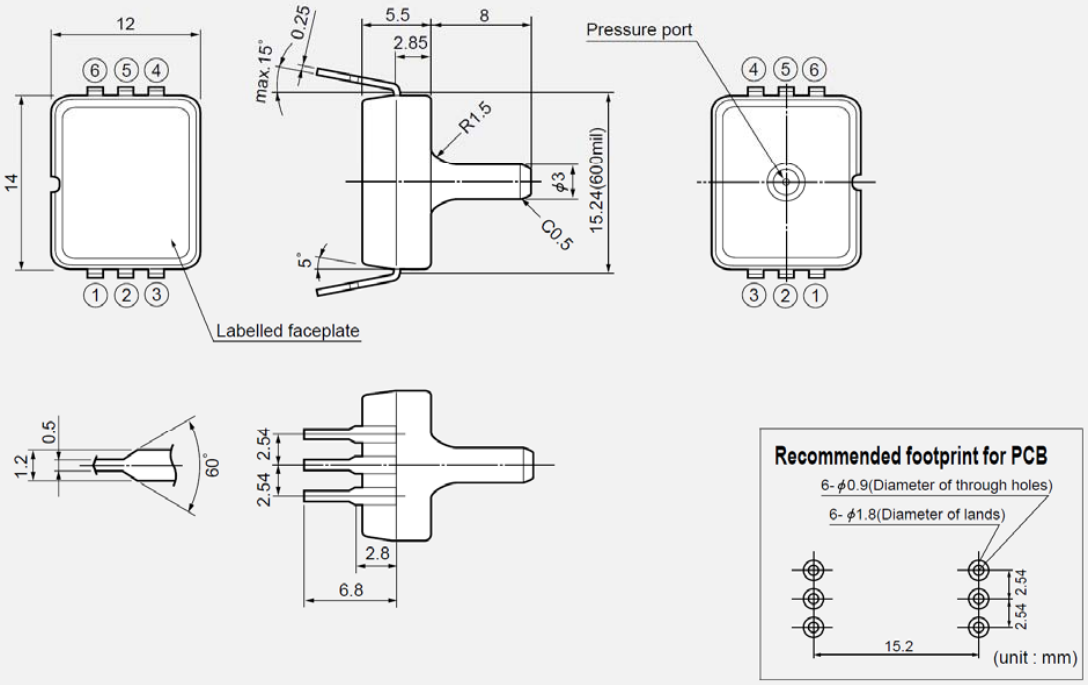

"Tsunagu" Technology Fujikura

Supporting your great ideas www.pewatron.com PEWATRON a member of the Angst + Pfister Group

■Connection diagram■

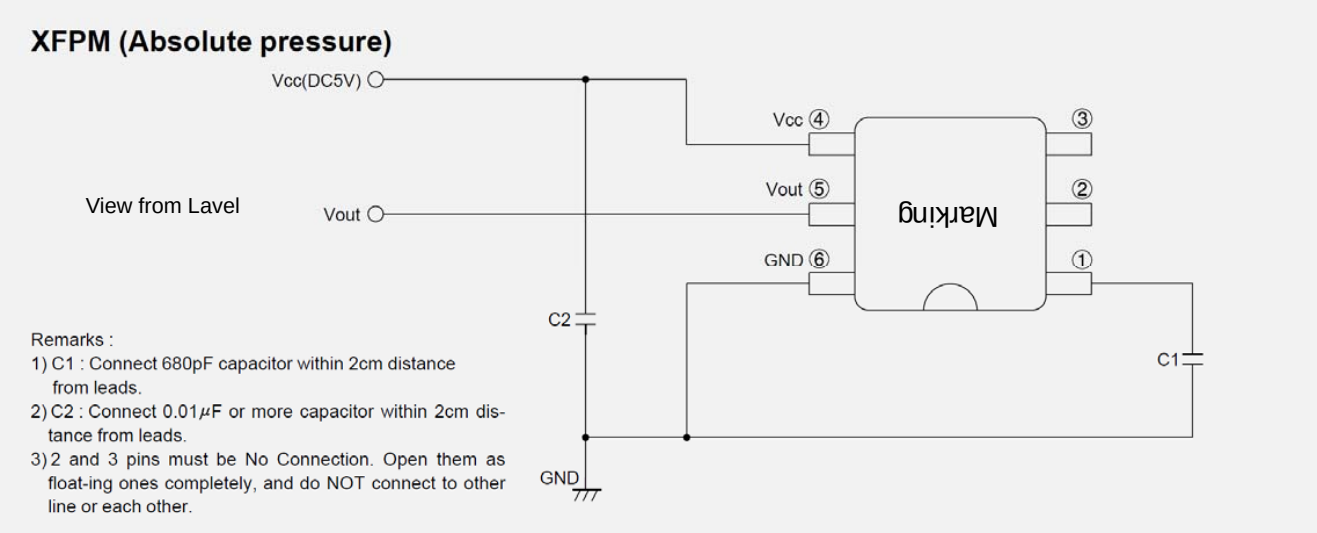

■Transfer Function■

Vout = Vs × (P × α + β) ± (Pressure Error × Temperature Error Multiplier × α × Vs)

Vs=Vcc=5.0V

P=Input pressure(kPa･abs)

α	β	Pressure Error (kPa)
0.009	-0.095	2.5

Temperature Error Multiplier

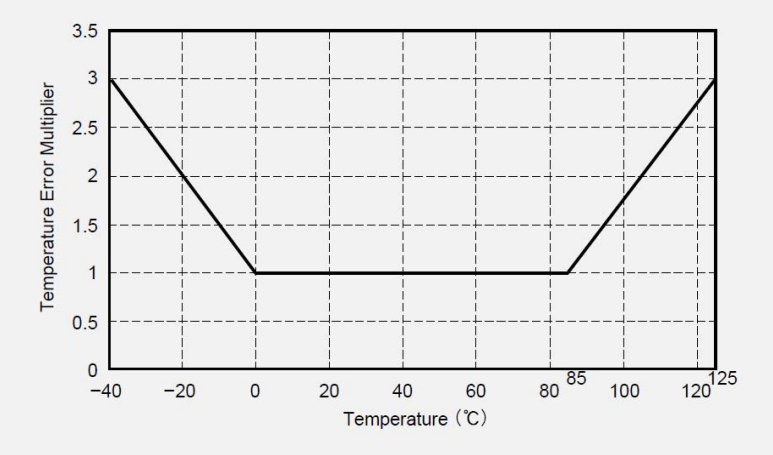

"Tsunagu" Technology Fujikura
Supporting your great ideas www.pewatron.com PEWATRON a member of the Angst + Pfister Group

■**Output characteristics**■

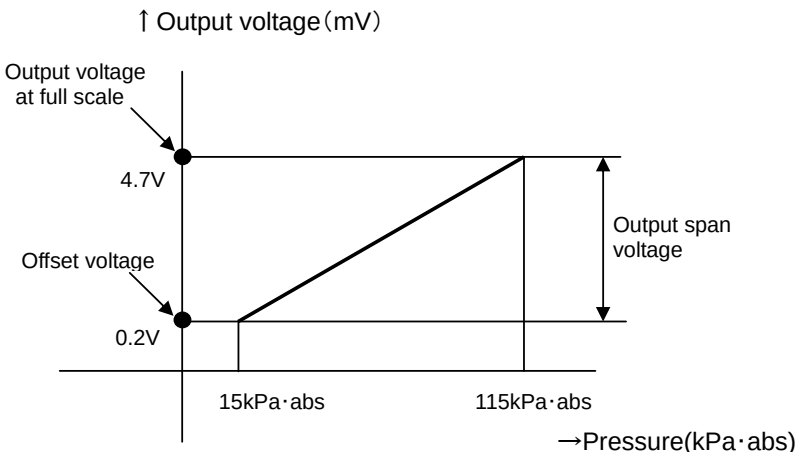

Note ; Please read instruction “Notes” before using the sensor.
Fujikura reserves the right to change specifications without notice.

If you have any questions regarding technical issues or specifications, please contact us.
Sensor Engineering Department 5-1 Kiba 1-chome, Koto-ku, Tokyo 135-8512, Japan
Phone +81-(0)3-5606-1072
E-mail : sensor@fujikura.co.jp

Supporting your great ideas www.pewatron.com PEWATRON a member of the Angst + Pfister Group

PEWATRON
a member of the Angst + Pfister Group

We are here for you. Addresses and Contacts

Sales Switzerland

Postcode 3000 – 9999
Liechtenstein

Matthias Rüegg
Ruhbergstrasse 32
CH-9230 Flawil

Phone + 41 44 877 35 18
Mobile + 41 76 491 66 66
Fax + 41 44 877 35 19

matthias.rueegg@pewatron.com

Postcode 1000 – 2999

Raffael Favaretto
Route d'Oron 124
CH-1673 Promasens

Phone + 41 44 877 35 22
Mobile + 41 76 444 63 14
Fax + 41 44 877 35 23

raffael.favaretto@pewatron.com

Sales Germany

Postcode 60000 – 79999

Dieter Hirthe
Mühlweg 23
D-71554 Weissach i.T.

Phone + 49 719 149 60 58
Mobile + 49 163 762 74 30
Fax + 49 719 193 31 88

dieter.hirthe@pewatron.com

Postcode 10000 – 59999
Postcode 80000 – 99999

Kurt Stritzelberger
Neumarkter Str. 86a
D-81673 Munich

Phone + 49 89 260 38 47
Mobile + 49 171 803 41 35
Fax + 49 89 43 10 91 91

kurt.stritzelberger@pewatron.com

Key Accounts
Aerospace and Defence

Claus Wübbena
Vogelkamp 26
D-26655 Westerstede

Phone + 49 4488 5204 614
Mobile + 49 173 9700 691
Fax + 49 4488 5204 616

claus.wuebbena@pewatron.com

Sales Austria

Kurt Stritzelberger
Neumarkter Str. 86a
D-81673 Munich

Phone + 49 89 260 38 47
Mobile + 49 17 18 03 41 35
Fax + 49 89 43 10 91 91

kurt.stritzelberger@pewatron.com

Sales Other Countries / Product Management

Sensors

Physical Sensors
Data Acquisition

Peter Felder
Phone + 41 44 877 35 05
peter.felder@pewatron.com

Geometrical Sensors

Eric Letsch
Phone + 41 44 877 35 14
eric.letsch@pewatron.com

Power Supplies

DC-DC Converters
Switching Power Supplies
DC-AC Inverters

Sebastiano Leggio
Phone + 41 44 877 35 06
sebastiano.leggio@pewatron.com

E-Components

Current Sensors
Man Machine Interface
Measurement Probes

Sebastiano Leggio
Phone + 41 44 877 35 06
sebastiano.leggio@pewatron.com

PEWATRON AG
Thurgauerstrasse 66
CH-8052 Zurich

Phone + 41 44 877 35 00
Fax + 41 44 877 35 25

www.pewatron.com
info@pewatron.com