Operating and Installation Manual

Differential pressure gauge Display P2 for air with 7 segment LED display, and 2 switching outputs, for

- Building automation, air-conditioning and clean-room technology
- Valve and damper control
- Filter, fan and blower monitoring
- Air flow control

Technical data

Supply voltage	
Type 990M with manual zeroing	16 ... 32VDC 18 ... 30VAC
Type 990A with automatic zeroing	22 ... 30VDC/AC
Optional wall power supply	100 ... 240VAC(In)/24VDC(Out) (50 ... 60Hz)
Output signal	0 ... 10V and 4 ... 20mA
Working resistance for output 4 ... 20mA	20 ... 480Ω
Power consumption	< 100mA for DC < 250mA for AC
Pressure medium	Air and non-agressive gases
Linearity and hysteresis error	≤ ± 1% of FS
Operating temperature	0 ... 50°C
Storage temperature	- 10 ... 70°C
Long-term stability, typical	≤ ± 0.5% to ± 2.5% of FS/year, Dependent on pressure range

Repeatability	≤ ± 0.2% of FS
Position dependence	≤ ± 0.02% of FS/g
Humidity	0 ... 95% rel., non condensing
Response time, switchable	0.0 - 20.0s
Process connection	4mm + 6mm tube connections
Electrical connection	Screw terminals for wires and braided wire up to 1.5mm²
Attachment	Control panel
Display	Red 7 segment LED display, 4-figure
Instrument dimensions	143mm x 96mm x 48mm
Weight	230g
IP rating after EN 60529	IP20
Standards / Conformity	EN60770, EN61326 2002/95/EC (RoHS)

Pressure measurement ranges

Type	Pa	mbar	inWC	Safe +ve pressure	Burst pressure	Temperature error
990A.303	0 ... 25	0.25	0.10	20 kPa	40 kPa	≤ ± 5 % of FS
990A.313	0 50	0.5	0.20	20 kPa	40 kPa	≤ ± 5 % of FS
990x.323	0 ... 100	1.0	0.40	20 kPa	40 kPa	≤ ± 5 % of FS
990x.333	0 ... 250	2.5	1.00	20 kPa	40 kPa	≤ ± 5 % of FS
990x.343	0 ... 500	5.0	2.00	20 kPa	40 kPa	≤ ± 2,5 % of FS
990x.353	0 ... 1 kPa	10	4.00	20 kPa	40 kPa	≤ ± 1 % of FS
990x.363	0 ... 2.5 kPa	25	10.05	40 kPa	70 kPa	≤ ± 1 % of FS
990x.373	0 ... 5 kPa	50	20.10	60 kPa	120 kPa	≤ ± 1 % of FS
990x.383	0 ... 10 kPa	100	40.20	60 kPa	120 kPa	≤ ± 1 % of FS
990x.393	0 ... 25 kPa	250	100.50	300 kPa	500 kPa	≤ ± 1 % of FS
990x.3A3	0 ... 50 kPa	500	200.10	300 kPa	500 kPa	≤ ± 1 % of FS
990x.3B3	0 ... 100 kPa	1,000	402.00	1.2 MPa	2 MPa	≤ ± 1 % of FS
990x.3F3	0 ... 250 kPa	2,500	1,004.75	1.2 MPa	2 MPa	≤ ± 1 % of FS

ELECTRICAL CONNECTION AND CONTROL PANEL DIMENSIONS

WARNING! Electrical systems must only be set-up, expanded, changed or updated by authorised electricians or electrical techicians. Never work on electrical systems, if you are not qualified to do so.
When working on the electrical system, it must be at zero volts.

Connection plan

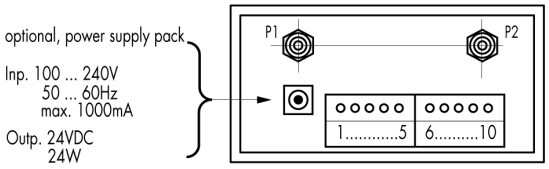

panel installation dimensions:

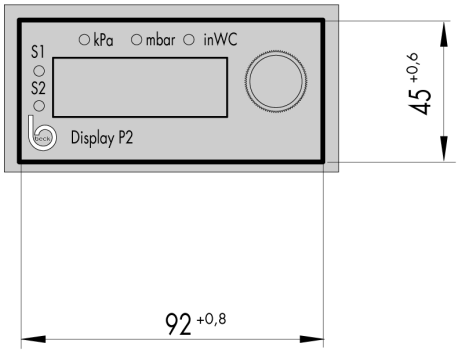

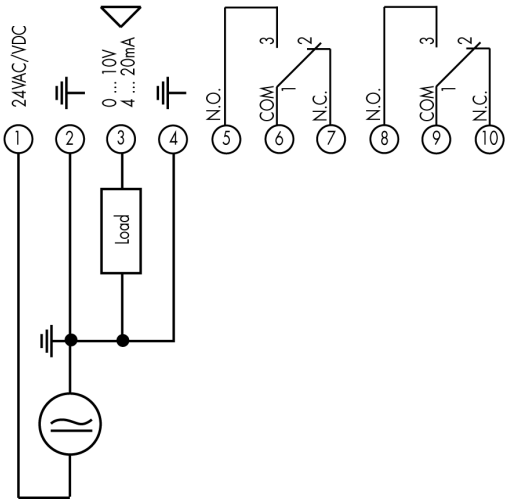

SWITCHING OUTPUT

The differential pressure gauge has two adjustable relay outputs in addition to the analogue output signal at the terminals 5 ... 10 with a maximum switching capability of 250VAC/5A.

FASTENING & TUBE CONNECTION

N.B.: When connecting and routing tubes ensure they are not kinked or damaged.
Leaking tubes and tube connections cause instrument faults or result in incorrect measurements.

Tube internal diameter = 3.5 / 5.5mm for optimum clamping. Use tube clamps from 25kPa.

P1 = Positive pressure measurement
P2 = Vacuum measurement
P1 & P2 = Differential pressure measurement

SAFETY & PRODUCT LIABILITY

The product to which this manual refers must only be installed, connected and commissioned by trained specialists.
The relevant safety conditions, intended use and technical data must be adhered to without fail. According to these conditions, systems must be switched to a zero-volts condition and be secured to prevent unintentional switching back on.
Damaged products must not be used. The product must not be used for US FDA controlled application fields.
No liability is accepted for damage arising from improper use.

DISPOSAL

The crossed out garbage can on this product indicates that at the end of its service life, the product must be disposed of separately from household waste. In future, please take all electrical and electronic products to a suitably equipped municipal collection point for their reuse / recyling.

Function settings of the pressure gauge Display P2

Display Main menu**	Remark	Rotary button Press / Turn	Display	Rotary button Press / Turn	Display Sub-menu	Unit	Information / description
Example **250**		**Type:** **990M.333114** **Pressure range:** **0 ... 250 Pa** **Analogue output:** **0 - 10 V**				Pa	Current pressure value
		↓					
OFFS	**1**	↓ ↕ ↓	**-3** **-124 ... 125** **0**			Pa Pa Pa	Zero point (offset) is displayed Adjust zero point Save zero point (display flashes for confirmation)
SP1	**3**	↓ ↕ ↓	**25** **1 ... 250** **50**			Pa Pa Pa	Switching point is displayed Adjust switching point Save switching point (display flashes for confirmation)
HYS1	**3**	↓ ↕ ↓	**2** **1 ... 250** **5**			Pa Pa Pa	Hysteresis is displayed for SP1 Adjust hysteresis for SP1 Save hysteresis for SP1 (Display flashes for confirmation)
SP2	**3**	↓ ↕ ↓	**75** **1 ... 250** **100**			Pa Pa Pa	Switching point is displayed Adjust switching point Save switching point (display flashes for confirmation)
HYS2	**3**	↓ ↕ ↓	**10** **1 ... 250** **5**			Pa Pa Pa	Hysteresis is displayed for SP2 Adjust hysteresis for SP2 Save hysteresis for SP2 (display flashes for confirmation)
OuA	**3**	↓ ↕ ↓	**0-10** **0-10 / 4-20** **4-20**			V V / mA mA	Display of the type of analogue output V or mA Switching between 0-10V / 4-20 mA Save setting (display flashes for confirmation)
AEP	**3**	↓ ↕ ↓	**250** **50 .. 250** **200**			Pa Pa Pa	Display of the working end point (pressure range end) Adjust AEP Save AEP (display flashes for confirmation)
dAA	**3**	↓ ↕ ↓	**0,01** **0.00 ... 20.00** **0.10**			s s s	Display damping time of the analogue output Set the damping time Save the damping time (Display flashes for confirmation)

Func	**2**	⬇ ↻ ⬇	**lin** **lin/sqrt** **sqrt**			- - -	Display analogue output function Changeover between linear / square root Save setting (display flashes for confirmation) *=> Function is enabled by customer order* *Default: linear*
	2	⬇ ↻ ⬇	**CAL** **CAL / rho**	⬇ ↻ ⬇	**0.52** **0.01 ... 1.00** **0.80**	- - -	Display Cal-factor Adjust Cal-factor Save setting (display flashes for confirmation)
	2	⬇ ↻ ⬇	**rho**	⬇ ↻ ⬇	**1.00** **0.08 ... 1.50** **1.25**	- - -	Display density rho of the medium Set rho Save setting (display flashes for confirmation)
HI		⬇	**250**			Pa	Display maximum applied pressure
Lo		⬇	**0**			Pa	Display minimum applied pressure
dISP		⬇ ↻ ⬇	**10** **10 ... 100** **50**			% % %	Display (LED) brightness Adjust brightness Save brightness (display flashes for confirmation) *=>In programming mode always set to 100%, once programming mode is finished, the brightness always goes smoothly to the set value*
Uni	**3**	⬇ ↻ ⬇	**1** **1 ... 3** **2**			Pa Pa/ mbar/ inWC mbar	Display the selected unit of pressure Set the pressure unit (LED 1...2...3) on the front LED1 Pa; LED2 mbar; LED3 inWC Save pressure unit (display flashes for confirmation) LED2 illuminates for mbar *=>Pressure units are specified by the customer*
OP-h		⬇	**48**			h	Operating hours display
Fir		⬇	**F.1.02**				Display version of firmware
PArA		⬇	**P.021**				Display software version parameter
PASS		⬇ ⬇ ↻ ⬇	**32** **32** **0 ... 99** **77**			- - - -	Password (blocks function settings[3] in the instrument, except if the password is "0") Do not change the password Set/alter the password Save password (display flashes for confirmation) Master password = 71 *=>enables access to the instrument if the password is lost*
End		⬇	**2.00**			mbar	Menu end / back to the pressure display

****** **The main menu points are reached by turning ↻ the rotary knob**
1 **Not applicable for the 990A type as the version with automatic zeroing.**
2 **Only available if the optional function "square root" has been ordered.**
3 **Blocked function setting - except if the password is "0" or "071" (master password).**

Technical data subjekt to change without prior notice Copyright © 2011 Beck GmbH

Beck GmbH
Pressure control technology
Postfach 11 31
D-71140 Steinenbronn
Phone +49 (71 57) 52 87-0
Fax +49 (71 57) 52 87-83
e-mail sales@beck-sensors.com
http://www.druckschalter.de

Supporting your great ideas www.pewatron.com
PEWATRON a member of the Angst + Pfister Group

PEWATRON
a member of the Angst + Pfister Group

We are here for you. Addresses and Contacts

Sales Switzerland

Postcode 3000 – 9999
Liechtenstein

Matthias Rüegg
Ruhbergstrasse 32
CH-9230 Flawil

Phone + 41 44 877 35 18
Mobile + 41 76 491 66 66
Fax + 41 44 877 35 19

matthias.rueegg@pewatron.com

Postcode 1000 – 2999

Raffael Favaretto
Route d'Oron 124
CH-1673 Promasens

Phone + 41 44 877 35 22
Mobile + 41 76 444 63 14
Fax + 41 44 877 35 23

raffael.favaretto@pewatron.com

Sales Germany

Postcode 60000 – 79999

Dieter Hirthe
Mühlweg 23
D-71554 Weissach i.T.

Phone + 49 719 149 60 58
Mobile + 49 163 762 74 30
Fax + 49 719 193 31 88

dieter.hirthe@pewatron.com

Postcode 10000 – 59999
Postcode 80000 – 99999

Kurt Stritzelberger
Neumarkter Str. 86a
D-81673 Munich

Phone + 49 89 260 38 47
Mobile + 49 171 803 41 35
Fax + 49 89 43 10 91 91

kurt.stritzelberger@pewatron.com

Key Accounts
Aerospace and Defence

Claus Wübbena
Vogelkamp 26
D-26655 Westerstede

Phone + 49 4488 5204 614
Mobile + 49 173 9700 691
Fax + 49 4488 5204 616

claus.wuebbena@pewatron.com

Sales Austria

Kurt Stritzelberger
Neumarkter Str. 86a
D-81673 Munich

Phone + 49 89 260 38 47
Mobile + 49 17 18 03 41 35
Fax + 49 89 43 10 91 91

kurt.stritzelberger@pewatron.com

Sales Other Countries / Product Management

Sensors

Physical Sensors
Data Acquisition

Peter Felder
Phone + 41 44 877 35 05
peter.felder@pewatron.com

Geometrical Sensors

Eric Letsch
Phone + 41 44 877 35 14
eric.letsch@pewatron.com

Power Supplies

DC-DC Converters
Switching Power Supplies
DC-AC Inverters

Sebastiano Leggio
Phone + 41 44 877 35 06
sebastiano.leggio@pewatron.com

E-Components

Current Sensors
Man Machine Interface
Measurement Probes

Sebastiano Leggio
Phone + 41 44 877 35 06
sebastiano.leggio@pewatron.com

PEWATRON AG
Thurgauerstrasse 66
CH-8052 Zurich

Phone + 41 44 877 35 00
Fax + 41 44 877 35 25

www.pewatron.com
info@pewatron.com