Sensing element／Gauge

FGM Data sheet

■Features

Surface mount package

■Applications

・Industrial instrumentation
・Pressure switch, Pneumatic device
・Medical device

■Part number for ordering

FGM－6　07P　G　SR

- FGM: Model
- 6: Length of the pressure port
  - 3：3mm
  - 6：6mm
- 07P: Rated Pressure (PSI)
- G: Pressure type
  - G：Gauge Pressure
- SR: Terminal leads configuration
  - Surface mount package

	Weight (grams)		Weight (grams)
	0.3	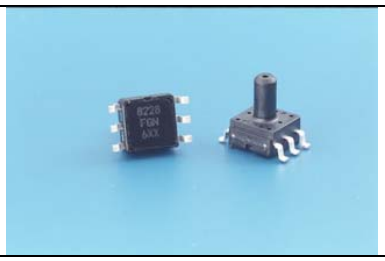	0.35

Measurable pressure range(kPa)	Part number for ordering	
	3mm pressure port	6mm pressure port
-13.79～13.79	FGM-302PGSR	FGM-602PGSR
-34.47～34.47	FGM-305PGSR	FGM-605PGSR
-48.26～48.26	FGM-307PGSR	FGM-607PGSR
-98.07～103.4	FGM-315PGSR	FGM-615PGSR
-98.07～206.8	FGM-330PGSR	FGM-630PGSR
-98.07～344.7	FGM-350PGSR	FGM-650PGSR
-98.07～482.6	FGM-370PGSR	FGM-670PGSR
-98.07～827.4	FGM-3120PGSR	FGM-6120PGSR

RoHS compliance

■Specifications

Model		02PG	05PG	07PG	15PG	30PG	50PG	70PG	120PG	Unit
Recommended operating conditions										
Pressure type		Gauge pressure								–
Rated pressure		13.79	34.47	48.26	103.4	206.8	344.7	482.6	827.4	kPa
Measurable pressure range		-13.79 ～13.79	-34.47 ～34.47	-48.26 ～48.26	-98.07 ～103.4	-98.07～ 206.8	-98.07～ 344.7	-98.07～ 482.6	-98.07～ 827.4	kPa
Temperature range		0～50								℃
Pressure media		Non-corrosive gases only (No liquid)								–
Excitation current (Constant)		1.5								mADC
Absolute maximum rating										
Maximum load pressure		Twice of rated pressure							1.5 times of rating pressure	–
Maximum excitation current		3.0								mADC
Operating temperature		-20～100								℃
Storage temperature		-40～120								℃
Operating humidity		30～80 (Non dew condition)								%RH
Electric characteristics（Drive Current 1.5mA constant, ambient temperature Ta=25℃）										
Output span voltage		60～140 (at 0kPa～rated pressure)								mV
Offset voltage		±20 (at 0kPa)								mV
Bridge resistance		4000～6000								Ω
Response time		2 (for the reference)								msec
Accuracy	TSO*	±5								%FS/ 0～50℃
	TCS*	2.5								
	Linearity	±0.5	±0.3					±0.5	±0.6	%FS
	Pressure hysteresis	±0.4	±0.2					±0.4		%FS

*TSO：Temperature sensitivity of offset voltage
*TCS：Temperature coefficient of output span voltage
*Temperature range from 0-50 deg C

"Tsunagu" Technology Fujikura

Supporting your great ideas　www.pewatron.com　PEWATRON a member of the Angst + Pfister Group

■Outline dimensions■

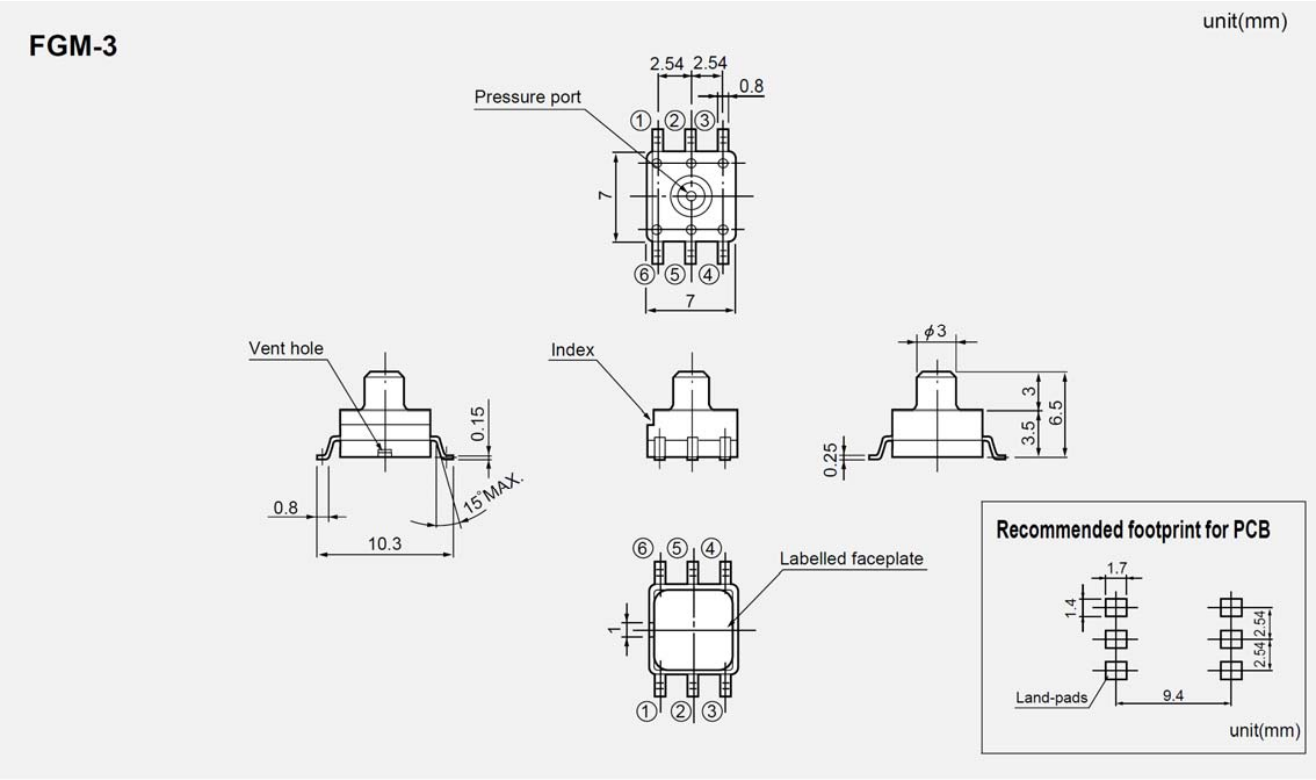

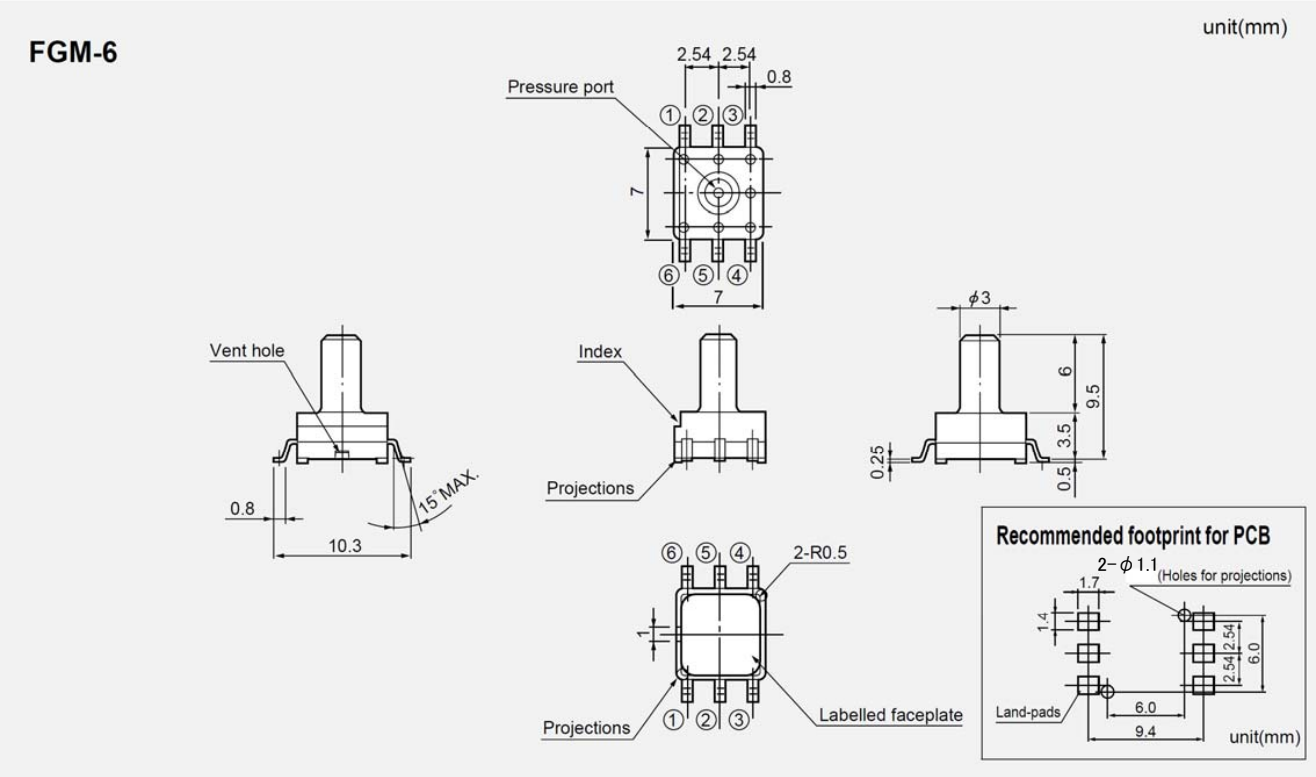

"Tsunagu" Technology Fujikura

■Connection diagram■

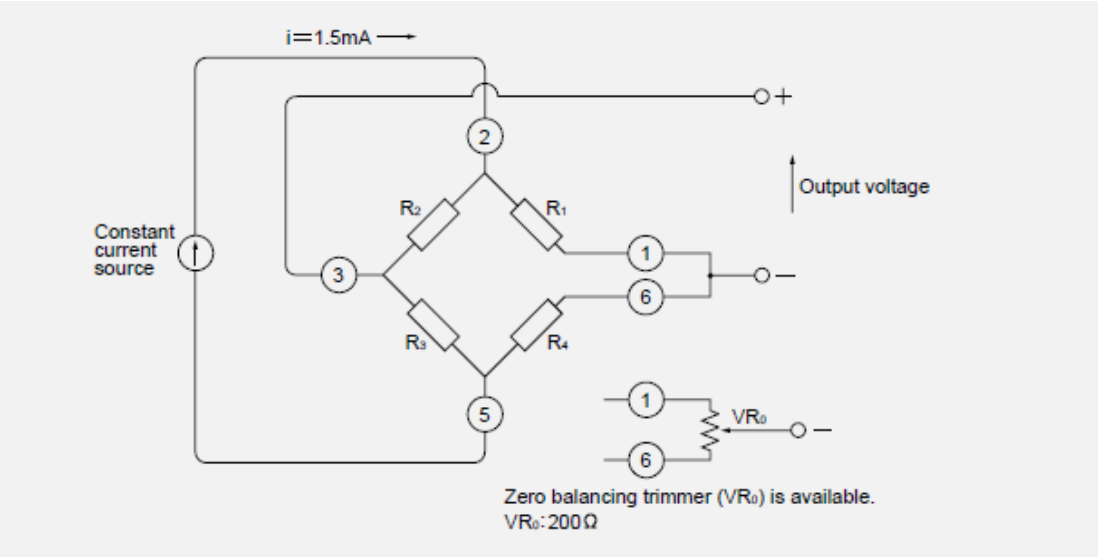

■Output characteristics■

＜302PG～307PG＞
＜602PG～607PG＞

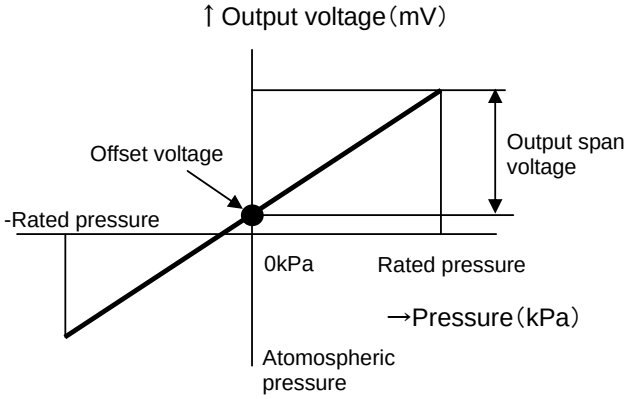

＜315PG～3120PG＞
＜615PG～6120PG＞

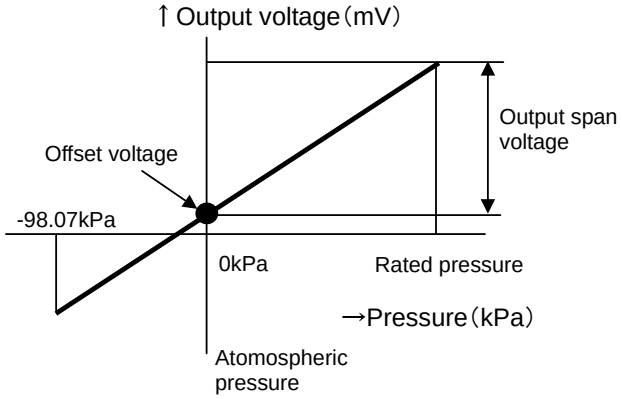

Note ; Please read instruction “Notes” before using the sensor.
Fujikura reserves the right to change specifications without notice.

If you have any questions regarding technical issues or specifications, please contact us.
Sensor Engineering Department 5-1 Kiba 1-chome, Koto-ku, Tokyo 135-8512, Japan
Phone +81-(0)3-5606-1072
E-mail : sensor@fujikura.co.jp

Supporting your great ideas www.pewatron.com PEWATRON a member of the Angst + Pfister Group

PEWATRON
a member of the Angst + Pfister Group

We are here for you. Addresses and Contacts

Sales Switzerland

Postcode 3000 – 9999
Liechtenstein

Matthias Rüegg
Ruhbergstrasse 32
CH-9230 Flawil

Phone + 41 44 877 35 18
Mobile + 41 76 491 66 66
Fax + 41 44 877 35 19

matthias.rueegg@pewatron.com

Postcode 1000 – 2999

Raffael Favaretto
Route d'Oron 124
CH-1673 Promasens

Phone + 41 44 877 35 22
Mobile + 41 76 444 63 14
Fax + 41 44 877 35 23

raffael.favaretto@pewatron.com

Sales Germany

Postcode 60000 – 79999

Dieter Hirthe
Mühlweg 23
D-71554 Weissach i.T.

Phone + 49 719 149 60 58
Mobile + 49 163 762 74 30
Fax + 49 719 193 31 88

dieter.hirthe@pewatron.com

Postcode 10000 – 59999
Postcode 80000 – 99999

Kurt Stritzelberger
Neumarkter Str. 86a
D-81673 Munich

Phone + 49 89 260 38 47
Mobile + 49 171 803 41 35
Fax + 49 89 43 10 91 91

kurt.stritzelberger@pewatron.com

Key Accounts
Aerospace and Defence

Claus Wübbena
Vogelkamp 26
D-26655 Westerstede

Phone + 49 4488 5204 614
Mobile + 49 173 9700 691
Fax + 49 4488 5204 616

claus.wuebbena@pewatron.com

Sales Austria

Kurt Stritzelberger
Neumarkter Str. 86a
D-81673 Munich

Phone + 49 89 260 38 47
Mobile + 49 17 18 03 41 35
Fax + 49 89 43 10 91 91

kurt.stritzelberger@pewatron.com

Sales Other Countries / Product Management

Sensors

Physical Sensors
Data Acquisition

Peter Felder
Phone + 41 44 877 35 05
peter.felder@pewatron.com

Geometrical Sensors

Eric Letsch
Phone + 41 44 877 35 14
eric.letsch@pewatron.com

Power Supplies

DC-DC Converters
Switching Power Supplies
DC-AC Inverters

Sebastiano Leggio
Phone + 41 44 877 35 06
sebastiano.leggio@pewatron.com

E-Components

Current Sensors
Man Machine Interface
Measurement Probes

Sebastiano Leggio
Phone + 41 44 877 35 06
sebastiano.leggio@pewatron.com

PEWATRON AG
Thurgauerstrasse 66
CH-8052 Zurich

Phone + 41 44 877 35 00
Fax + 41 44 877 35 25

www.pewatron.com
info@pewatron.com