Model 23 and 33 1psi

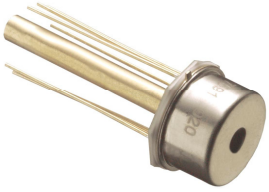

Model 23

Model 33

- **PC Board Mountable Pressure Sensor**
- **0-100 mV Output**
- **Current Excitation**
- **Gage and Differential**
- **Temperature Compensated**

DESCRIPTION

The Models 23 and 33 are temperature compensated, piezoresistive silicon pressure sensor packaged in TO-8 configuration. It provides excellent performance and long-term stability.

Integral temperature compensation is provided over a range of 0-50℃ using laser-trimmed resistors. An additional laser-trimmed resistor is included to normalize pressure sensitivity variations by programming the gain of an external differential amplifier. This provides sensitivity interchangeability of ±1%.

Please refer to the Models 23 and 33 standard datasheets for information on products with operating pressures greater than 1 psi.

FEATURES

- TO-8 Package
- 0ºC to 50ºC Compensated Temperature Range
- ±0.3% Non Linearity
- 1.0% Interchangeable Span (provided by gain set resistor)
- Solid State Reliability

APPLICATIONS

- Medical Instruments
- Process Control
- Factory Automation
- Leak Detection
- Airspeed Measurement
- Level Detection

STANDARD RANGES

	Model 23	*Model 33*
Range	**psig**	**psid**
0 to 1	•	•

Supporting your great ideas www.pewatron.com
PEWATRON a member of the Angst + Pfister Group

measurement SPECIALTIES

Model 23 and 33 1psi

PERFORMANCE SPECIFICATIONS

Supply Current: 1.5mA
Ambient Temperature: 25°C (unless otherwise specified)

	PRESSURE RANGE 0 – 1 psi				
PARAMETERS	**MIN**	**TYP**	**MAX**	**UNITS**	**NOTES**
Span	65	100	150	mV	1
Zero Pressure Output	-2		2	mV	
Pressure Non Linearity	-0.3	±0.2	0.3	%Span	2
Pressure Hysteresis	-0.05	±0.01	0.05	%Span	
Input & Output Resistance	2500	4400	6000	Ω	
Temperature Error – Span	-1.0	±0.5	1.0	%Span	3
Temperature Error – Zero	-1.0	±0.5	1.0	%Span	3
Thermal Hysteresis – Zero		±0.1		%Span	3
Supply Current		1.5	2.0	mA	
Response Time (10% to 90%)		1.0		mS	4
Output Noise (10Hz to 1kHz)		1.0		µV p-p	
Insulation Resistance (50 Vdc)	50			M Ω	5
Long Term Stability (Offset & Span)		±0.2		%Span	6
Pressure Overload			10	psi	
Compensated Temperature	0		50	°C	
Operating Temperature	-40		+125	°C	
Storage Temperature	-50		+150	°C	
Weight			3	grams	
Solder Temperature	250ºC Max 5 Sec.				
Media	Non-Corrosive Dry Gases Compatible with Silicon, Pyrex, RTV, Gold, Nickel, and Aluminum				

Notes

1. Ratiometric to supply current.
2. Best fit straight line.
3. Maximum temperature error between 0°C and 50°C with respect to 25°C.
4. For a zero-to-full scale pressure step change.
5. Minimum distance between case and pins.
6. Long term stability over a one year period with constant current and temperature.

Supporting your great ideas www.pewatron.com PEWATRON a member of the Angst + Pfister Group

Model 23 and 33 1psi

DIMENSIONS

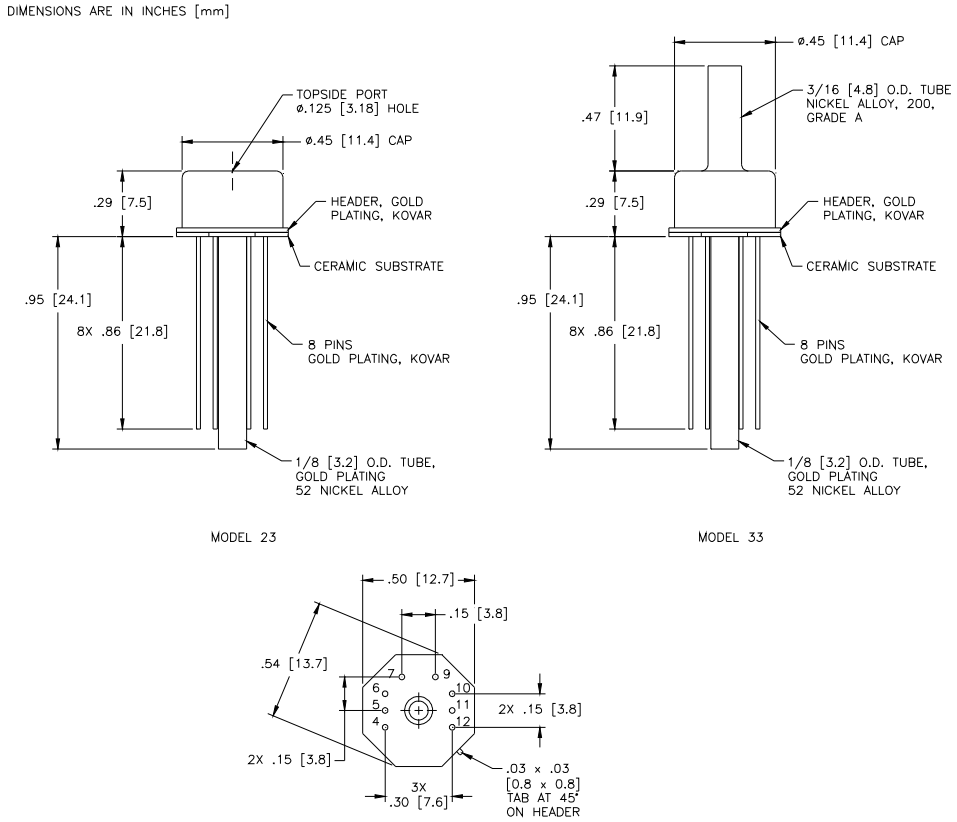

CONNECTIONS

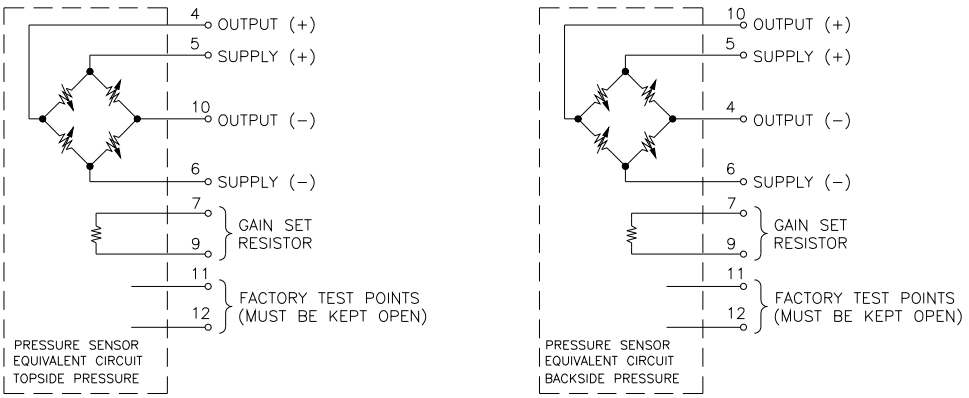

Supporting your great ideas
www.pewatron.com
PEWATRON
a member of the Angst + Pfister Group

Model 23 and 33 1psi

APPLICATION SCHEMATIC

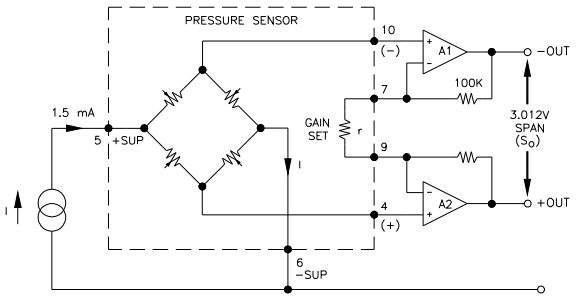

TOPSIDE PRESSURE

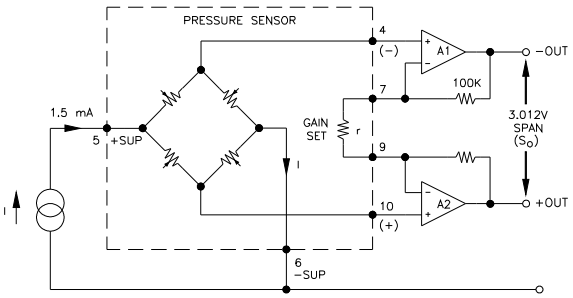

BACKSIDE PRESSURE

ORDERING INFORMATION

23A - 001 G

- Type (G = Gage)
- Pressure Range
- Model

33A - 001 G

- Type (G = Gage)
- Pressure Range
- Model

NORTH AMERICA

Measurement Specialties
45738 Northport Loop West
Fremont, CA 94538
Tel: 1-800-767-1888
Fax: 1-510-498-1578
Sales: pfg.cs.amer@meas-spec.com

EUROPE

Measurement Specialties
(Europe), Ltd.
26 Rue des Dames
78340 Les Clayes-sous-Bois, France
Tel: +33 (0) 130 79 33 00
Fax: +33 (0) 134 81 03 59
Sales: pfg.cs.emea@meas-spec.com

ASIA

Measurement Specialties
(China), Ltd.
F1.6-4D, Tian An Development
Compound
Shenzhen, China 518048
Tel: +86 755 8330 1004
Fax: +86 755 8330 6797
Sales: pfg.cs.asia@meas-spec.com

The information in this sheet has been carefully reviewed and is believed to be accurate; however, no responsibility is assumed for inaccuracies. Furthermore, this information does not convey to the purchaser of such devices any license under the patent rights to the manufacturer. Measurement Specialties, Inc. reserves the right to make changes without further notice to any product herein. Measurement Specialties, Inc. makes no warranty, representation or guarantee regarding the suitability of its product for any particular purpose, nor does Measurement Specialties, Inc. assume any liability arising out of the application or use of any product or circuit and specifically disclaims any and all liability, including without limitation consequential or incidental damages. Typical parameters can and do vary in different applications. All operating parameters must be validated for each customer application by customer's technical experts. Measurement Specialties, Inc. does not convey any license under its patent rights nor the rights of others.

Supporting your great ideas www.pewatron.com
PEWATRON a member of the Angst + Pfister Group

PEWATRON
a member of the Angst + Pfister Group

We are here for you. Addresses and Contacts

Sales Switzerland

Postcode 3000 – 9999
Liechtenstein

Matthias Rüegg
Ruhbergstrasse 32
CH-9230 Flawil

Phone + 41 44 877 35 18
Mobile + 41 76 491 66 66
Fax + 41 44 877 35 19

matthias.rueegg@pewatron.com

Postcode 1000 – 2999

Raffael Favaretto
Route d'Oron 124
CH-1673 Promasens

Phone + 41 44 877 35 22
Mobile + 41 76 444 63 14
Fax + 41 44 877 35 23

raffael.favaretto@pewatron.com

Sales Germany

Postcode 60000 – 79999

Dieter Hirthe
Mühlweg 23
D-71554 Weissach i.T.

Phone + 49 719 149 60 58
Mobile + 49 163 762 74 30
Fax + 49 719 193 31 88

dieter.hirthe@pewatron.com

Postcode 10000 – 59999
Postcode 80000 – 99999

Kurt Stritzelberger
Neumarkter Str. 86a
D-81673 Munich

Phone + 49 89 260 38 47
Mobile + 49 171 803 41 35
Fax + 49 89 43 10 91 91

kurt.stritzelberger@pewatron.com

Key Accounts
Aerospace and Defence

Claus Wübbena
Vogelkamp 26
D-26655 Westerstede

Phone + 49 4488 5204 614
Mobile + 49 173 9700 691
Fax + 49 4488 5204 616

claus.wuebbena@pewatron.com

Sales Austria

Kurt Stritzelberger
Neumarkter Str. 86a
D-81673 Munich

Phone + 49 89 260 38 47
Mobile + 49 17 18 03 41 35
Fax + 49 89 43 10 91 91

kurt.stritzelberger@pewatron.com

Sales Other Countries / Product Management

Sensors

Physical Sensors
Data Acquisition

Peter Felder
Phone + 41 44 877 35 05
peter.felder@pewatron.com

Geometrical Sensors

Eric Letsch
Phone + 41 44 877 35 14
eric.letsch@pewatron.com

Power Supplies

DC-DC Converters
Switching Power Supplies
DC-AC Inverters

Sebastiano Leggio
Phone + 41 44 877 35 06
sebastiano.leggio@pewatron.com

E-Components

Current Sensors
Man Machine Interface
Measurement Probes

Sebastiano Leggio
Phone + 41 44 877 35 06
sebastiano.leggio@pewatron.com

PEWATRON AG
Thurgauerstrasse 66
CH-8052 Zurich

Phone + 41 44 877 35 00
Fax + 41 44 877 35 25

www.pewatron.com
info@pewatron.com