measurement SPECIALTIES

Model 82 UltraStable™

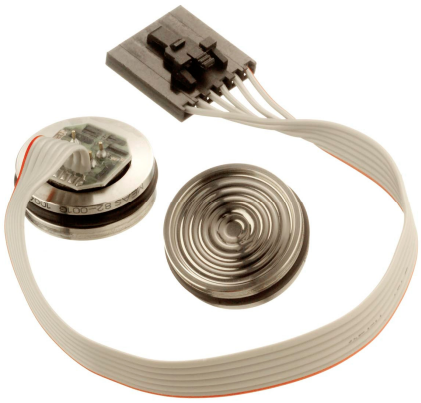

- **316L SS Pressure Sensor**
- **19mm Diameter Package**
- **0 - 100mV Output**
- **Absolute and Gage**
- **Temperature Compensated**

DESCRIPTION

The Model 82 UltraStable™ is a 19mm small profile, media compatible, piezoresistive silicon pressure sensor packaged in a 316L stainless steel housing. The Model 82 UltraStable™ is designed for o-ring mounting and OEM applications where compatibility with corrosive media is required.

The sensing package utilizes silicone oil to transfer pressure from the 316L stainless steel diaphragm to the sensing element. A ceramic substrate is attached to the package that contains laser-trimmed resistors for temperature compensation and offset correction. An additional laser-trimmed resistor is included which can be used to adjust an external differential amplifier and provide span interchangeability to within ±1%.

Please refer to the Model 82 Low Pressure datasheet for information on products with operating pressures less than 15 psi.

FEATURES

- O-Ring Mount
- -20ºC to +85ºC Compensated Temperature Range
- ±0.1% Pressure Non Linearity
- 1.0% Interchangeable Span (provided by gain set resistor)
- Solid State Reliability

APPLICATIONS

- Medical Instruments
- Process Control
- Fresh & Waste Water Measurements
- Refrigeration/Compressors
- Pressure Transmitters
- Hydraulic Controls

STANDARD RANGES

Range	psig	psia
0 to 15	•	•
0 to 30	•	•
0 to 50	•	•
0 to 100	•	•
0 to 300	•	•
0 to 500	•	•

Supporting your great ideas www.pewatron.com PEWATRON a member of the Angst + Pfister Group

measurement SPECIALTIES

Model 82 UltraStable™

PERFORMANCE SPECIFICATIONS

Supply Current: 1.5mA
Ambient Temperature: 25°C (unless otherwise specified)
Parameters are specified for the compensated versions only

PARAMETERS	MIN	TYP	MAX	UNITS	NOTES
Span	75	100	150	mV	1
Zero Pressure Output	-1		1	mV	
Pressure Non Linearity	-0.1		0.1	%Span	2
Pressure Hysteresis	-0.05	±0.02	0.05	%Span	
Repeatability		±0.02		%Span	
Input Resistance	2500	4000	5800	Ω	
Output Resistance	3000		25k	Ω	
Temperature Error – Span	-0.75		0.75	%Span	3
Temperature Error – Offset	-0.5		0.5	%Span	3
Thermal Hysteresis – Span	-0.25	±0.05	0.25	%Span	3
Thermal Hysteresis – Offset	-0.25	±0.05	0.25	%Span	3
Long Term Stability – Span		±0.1		%Span	4
Long Term Stability – Offset		±0.1		%Span	4
Supply Current	0.5	1.5	2.0	mA	
Insulation Resistance (50Vdc)	50			MΩ	5
Pressure Overload			3X	Rated	
Compensated Temperature	-20		+85	ºC	
Operating Temperature	-40		+125	ºC	6
Storage Temperature	-50		+125	ºC	6
Weight			24	grams	
Media – Pressure Port	Liquids and Gases compatible with 316L Stainless Steel and Buna-N				7
Media – Reference Port	Compatible with Silicon, Pyrex, Gold, Fluorosilicone RTV and 316L Stainless Steel				

Notes

1. Ratiometric to supply current.
2. Best fit straight line.
3. Maximum temperature error between -20°C and +85°C with respect to 25°C.
4. Long term stability over a one year period with constant current and temperature.
5. Minimum resistance between case and pins.
6. Maximum temperature range for product with standard cable and connector is -20°C to +105°C.
7. Gage units not recommended for high vacuum applications. For high vacuum applications consult factory.

Supporting your great ideas www.pewatron.com PEWATRON a member of the Angst + Pfister Group

Model 82 UltraStable™

DIMENSIONS

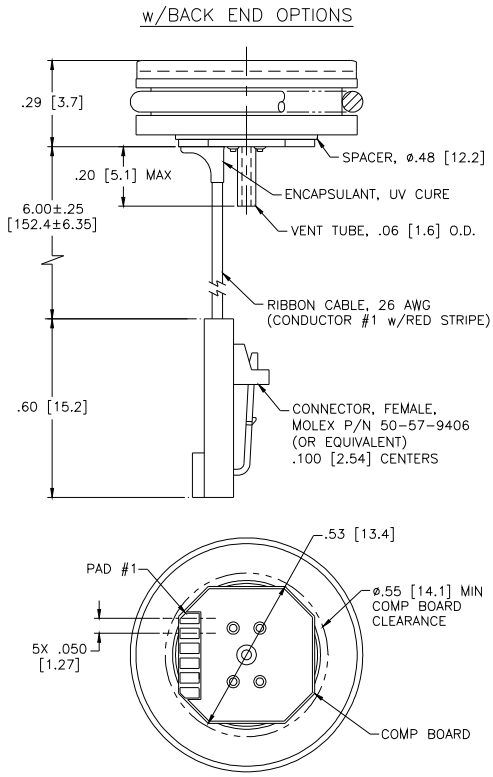

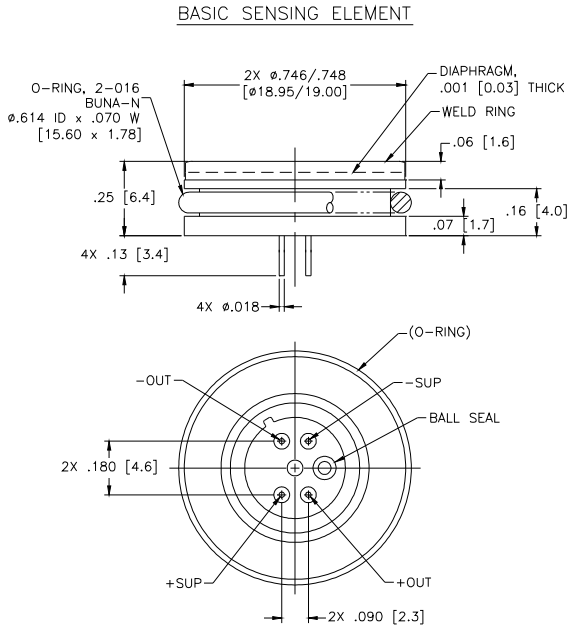

PAD/CNDTR NO	FUNCTION
1	+OUT
2	-SUP
3	+SUP
4	-OUT
5	GAIN
6	GAIN

ALL DIMENSIONS ARE IN INCHES [mm].

CONNECTIONS

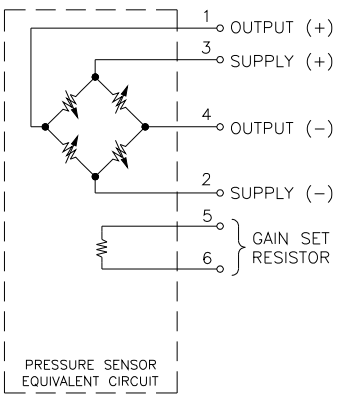

Supporting your great ideas www.pewatron.com
PEWATRON a member of the Angst + Pfister Group

Model 82 UltraStable™

APPLICATION SCHEMATIC

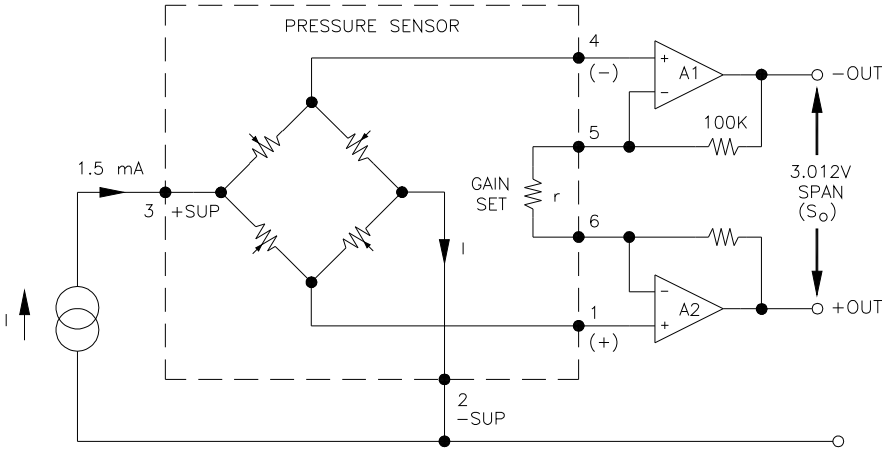

APPLICATION SCHEMATIC

ORDERING INFORMATION

82 - 050 G - C T

- T: Vent (T = Tube, Blank = No Tube)
- C: Electrical (C = Ribbon Cable with Connector, R = Ribbon Cable, P = Solder Pads, L = Leads, Uncompensated)
- G: Type (A = Absolute, G = Gage)
- 050: Pressure Range
- 82: Model

NORTH AMERICA

Measurement Specialties
45738 Northport Loop West
Fremont, CA 94538
Tel: 1-800-767-1888
Fax: 1-510-498-1578
Sales: pfg.cs.amer@meas-spec.com

EUROPE

Measurement Specialties
(Europe), Ltd.
26 Rue des Dames
78340 Les Clayes-sous-Bois, France
Tel: +33 (0) 130 79 33 00
Fax: +33 (0) 134 81 03 59
Sales: pfg.cs.emea@meas-spec.com

ASIA

Measurement Specialties
(China), Ltd.
F1.6-4D, Tian An Development
Compound
Shenzhen, China 518048
Tel: +86 755 8330 1004
Fax: +86 755 8330 6797
Sales: pfg.cs.asia@meas-spec.com

The information in this sheet has been carefully reviewed and is believed to be accurate; however, no responsibility is assumed for inaccuracies. Furthermore, this information does not convey to the purchaser of such devices any license under the patent rights to the manufacturer. Measurement Specialties, Inc. reserves the right to make changes without further notice to any product herein. Measurement Specialties, Inc. makes no warranty, representation or guarantee regarding the suitability of its product for any particular purpose, nor does Measurement Specialties, Inc. assume any liability arising out of the application or use of any product or circuit and specifically disclaims any and all liability, including without limitation consequential or incidental damages. Typical parameters can and do vary in different applications. All operating parameters must be validated for each customer application by customer's technical experts. Measurement Specialties, Inc. does not convey any license under its patent rights nor the rights of others.

Supporting your great ideas www.pewatron.com PEWATRON a member of the Angst + Pfister Group

PEWATRON
a member of the Angst + Pfister Group

We are here for you. Addresses and Contacts

Sales Switzerland

Postcode 3000 – 9999
Liechtenstein

Matthias Rüegg
Ruhbergstrasse 32
CH-9230 Flawil

Phone + 41 44 877 35 18
Mobile + 41 76 491 66 66
Fax + 41 44 877 35 19

matthias.rueegg@pewatron.com

Postcode 1000 – 2999

Raffael Favaretto
Route d'Oron 124
CH-1673 Promasens

Phone + 41 44 877 35 22
Mobile + 41 76 444 63 14
Fax + 41 44 877 35 23

raffael.favaretto@pewatron.com

Sales Germany

Postcode 60000 – 79999

Dieter Hirthe
Mühlweg 23
D-71554 Weissach i.T.

Phone + 49 719 149 60 58
Mobile + 49 163 762 74 30
Fax + 49 719 193 31 88

dieter.hirthe@pewatron.com

Postcode 10000 – 59999
Postcode 80000 – 99999

Kurt Stritzelberger
Neumarkter Str. 86a
D-81673 Munich

Phone + 49 89 260 38 47
Mobile + 49 171 803 41 35
Fax + 49 89 43 10 91 91

kurt.stritzelberger@pewatron.com

Key Accounts
Aerospace and Defence

Claus Wübbena
Vogelkamp 26
D-26655 Westerstede

Phone + 49 4488 5204 614
Mobile + 49 173 9700 691
Fax + 49 4488 5204 616

claus.wuebbena@pewatron.com

Sales Austria

Kurt Stritzelberger
Neumarkter Str. 86a
D-81673 Munich

Phone + 49 89 260 38 47
Mobile + 49 17 18 03 41 35
Fax + 49 89 43 10 91 91

kurt.stritzelberger@pewatron.com

Sales Other Countries / Product Management

Sensors

Physical Sensors
Data Acquisition

Peter Felder
Phone + 41 44 877 35 05
peter.felder@pewatron.com

Geometrical Sensors

Eric Letsch
Phone + 41 44 877 35 14
eric.letsch@pewatron.com

Power Supplies

DC-DC Converters
Switching Power Supplies
DC-AC Inverters

Sebastiano Leggio
Phone + 41 44 877 35 06
sebastiano.leggio@pewatron.com

E-Components

Current Sensors
Man Machine Interface
Measurement Probes

Sebastiano Leggio
Phone + 41 44 877 35 06
sebastiano.leggio@pewatron.com

PEWATRON AG
Thurgauerstrasse 66
CH-8052 Zurich

Phone + 41 44 877 35 00
Fax + 41 44 877 35 25

www.pewatron.com
info@pewatron.com