The factory-set pressure switches.

Pressure switch 901

with factory-set pressure setting

Application

Factory-set pressure switch monitoring overpressure, vacuum or differential pressure of liquid and gaseous – also aggressive – media.

Pressure setting and switching differential are factory-set by the manufacturer.

Temperature range

Ambient temperature from –20° C to 85° C.
Temperature of media up to 85° C or 130° C depending on material of pressure connection and diaphragm.

Diaphragm material

Depending on media NBR, Silicone, FKM (Viton®), EPDM.
For 901.30 Silicone, others upon request.

Electrical rating

Values indicated for resistive load

AgNi-contacts:	6 (1.5) A/250 VAC 2 A/24 VDC
Gold-plated contacts:	100 mA/24 VAC 30 mA/24 VDC

AgNi-contacts up to 10 A/250 VAC can be supplied upon request.

Electrical connection

AMP connection 6.3 mm x 0.8 mm DIN 46244.

Arrangement of contacts

for 901.1x, 901.30, 901.41, 901.51

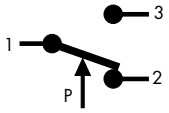

only for 901.2x

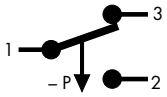

CE Conformity

each depending on technical specification: Low Voltage Directive 2006/95/EC; RoHS Directive 2002/95/EC; ATEX-Directive 94/9/EC; Product types tested by TÜV Südwest.

Life

Minimum 10^6 cycles.

Damping

Restrictors alternatively with 0.3/0.5/0.8 mm diameter.

Accessories

Various mounting brackets and protection caps with IP 44, IP 54 and IP 65.

Mounting position

Mounting in any position, to be specified for settings below 100 mbar.

Pressure connection

Type	Tube connection			Threaded connection			
	5.0 mm	6.5 mm	10.0 mm	M10 x1	G1/8	G1/4	G1/2
901.1x	PA	PA, PPS	PA, PPS	PA, PVDF CuZn40, V_2A	PA, PVDF CuZn40, V_2A	PVDF CuZn40, V_2A	CuZn40
901.2x	PA	PA, PPS	PA, PPS	PA, PVDF CuZn40, V_2A	PA, PVDF CuZn40, V_2A	CuZn40, V_2A	CuZn40
901.30		PA					
901.41		PA, PPS	PA, PPS	PA,PVDF CuZn40, V_2A	PA, PVDF CuZn40, V_2A	CuZn40, V_2A	CuZn40
901.51				CuZn40	CuZn40, V_2A	CuZn40, V_2A	

PA = polyamide, PVDF = polyvinyldifluoride, PPS = polyphenylensulfide, CuZn40 = brass, V_2A = stainless steel

For temperature above 85° C metal or PPS pressure connection is required. Upon request pressure connections of other sizes, other plastics or brass nickel-plated are available.

Viton® is a registered trademark of DuPont Dow Elastomers.

Overpressure range

Type	Factory-set trip pressure		Standard switching differential		Tolerance band in % of trip pressure	Maximum positive working pressure	Maximum negative working pressure
	between	and	lower end of range	upper end of range		standard/ extended	standard/ extended
901.1x	5 mbar	200 mbar	2.5 mbar	50 mbar	±10 %	0.5/4 bar	–/–1 bar
	200 mbar	1.000 mbar	50 mbar	150 mbar	±10 %	1/4 bar	–/–1 bar
901.41	500 mbar	3.000 mbar	200 mbar	600 mbar	±10 %	10 bar	–1 bar
901.51	1.0 bar	12 bar	0.2 bar	1.5 bar	±10 %	25 bar	–1 bar

Vacuum range

Type	Factory-set trip pressure		Standard switching differential		Tolerance band in % of trip pressure	Maximum positive working pressure	Maximum negative working pressure
	between	and	lower end of range	upper end of range		standard/ extended	standard/ extended
901.2x	– 5 mbar	– 200 mbar	2.5 mbar	50 mbar	±10 %	0.5/4 bar	–1 bar
	– 200 mbar	– 900 mbar	50 mbar	150 mbar	±10 %	1/4 bar	–1 bar

Differential pressure range

Type	Factory-set trip pressure		Standard switching differential		Tolerance band in % of trip pressure	Maximum positive working pressure	Maximum negative working pressure
	between	and	lower end of range	upper end of range		standard/ extended	standard/ extended
901.30	5 mbar	50 mbar	2.5 mbar	25 mbar	±10 %	100 mbar	–100 mbar

Pressure switch 901

with factory-set pressure setting

901.10/20

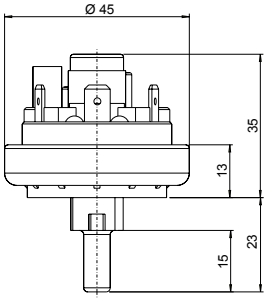

901.30

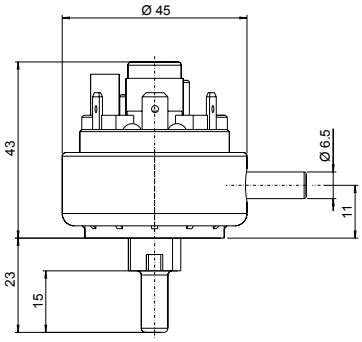

Protection caps

6329 IP 44

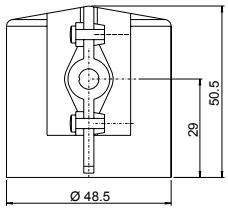

6345 IP 54

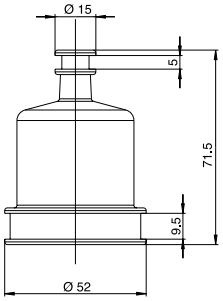

901.11/21/41

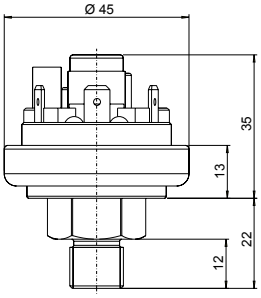

901.51

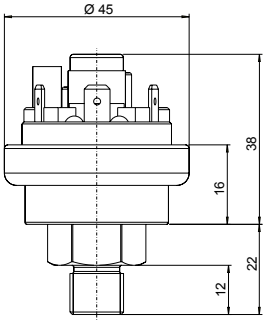

6371 IP 54 / 6372 IP 65

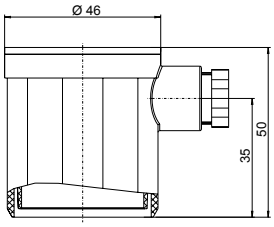

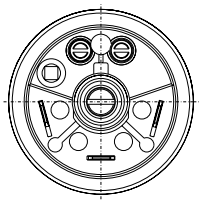

Mounting brackets

6403 6404 6405

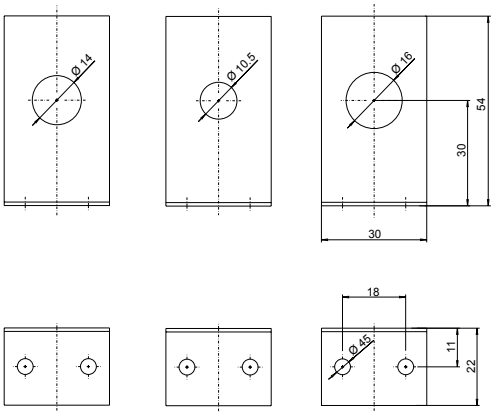

6374 IP 54 / 6375 IP 65

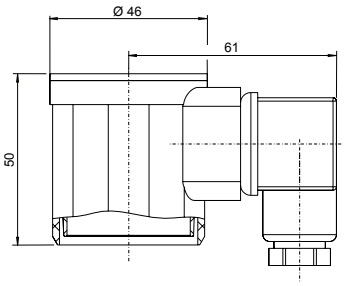

PEWATRON
a member of the Angst + Pfister Group

We are here for you. Addresses and Contacts

Sales Switzerland

Postcode 3000 – 9999
Liechtenstein

Matthias Rüegg
Ruhbergstrasse 32
CH-9230 Flawil

Phone + 41 44 877 35 18
Mobile + 41 76 491 66 66
Fax + 41 44 877 35 19

matthias.rueegg@pewatron.com

Postcode 1000 – 2999

Raffael Favaretto
Route d'Oron 124
CH-1673 Promasens

Phone + 41 44 877 35 22
Mobile + 41 76 444 63 14
Fax + 41 44 877 35 23

raffael.favaretto@pewatron.com

Sales Germany

Postcode 60000 – 79999

Dieter Hirthe
Mühlweg 23
D-71554 Weissach i.T.

Phone + 49 719 149 60 58
Mobile + 49 163 762 74 30
Fax + 49 719 193 31 88

dieter.hirthe@pewatron.com

Postcode 10000 – 59999
Postcode 80000 – 99999

Kurt Stritzelberger
Neumarkter Str. 86a
D-81673 Munich

Phone + 49 89 260 38 47
Mobile + 49 171 803 41 35
Fax + 49 89 43 10 91 91

kurt.stritzelberger@pewatron.com

Key Accounts
Aerospace and Defence

Claus Wübbena
Vogelkamp 26
D-26655 Westerstede

Phone + 49 4488 5204 614
Mobile + 49 173 9700 691
Fax + 49 4488 5204 616

claus.wuebbena@pewatron.com

Sales Austria

Kurt Stritzelberger
Neumarkter Str. 86a
D-81673 Munich

Phone + 49 89 260 38 47
Mobile + 49 17 18 03 41 35
Fax + 49 89 43 10 91 91

kurt.stritzelberger@pewatron.com

Sales Other Countries / Product Management

Sensors

Physical Sensors
Data Acquisition

Peter Felder
Phone + 41 44 877 35 05
peter.felder@pewatron.com

Geometrical Sensors

Eric Letsch
Phone + 41 44 877 35 14
eric.letsch@pewatron.com

Power Supplies

DC-DC Converters
Switching Power Supplies
DC-AC Inverters

Sebastiano Leggio
Phone + 41 44 877 35 06
sebastiano.leggio@pewatron.com

E-Components

Current Sensors
Man Machine Interface
Measurement Probes

Sebastiano Leggio
Phone + 41 44 877 35 06
sebastiano.leggio@pewatron.com

PEWATRON AG
Thurgauerstrasse 66
CH-8052 Zurich

Phone + 41 44 877 35 00
Fax + 41 44 877 35 25

www.pewatron.com
info@pewatron.com