measurement SPECIALTIES

Model 3801A Accelerometer

Gas Damped, DC Response
Hermetically Sealed
mV Output
10,000g Over-Range Protection

The Model 3801A is a mV output piezoresistive MEMS accelerometer in a rugged welded hermetic package. The accelerometer incorporates mechanical stops for over-range protection up to greater than 10,000g. The model 3801A is offered in ranges from ±2 to ±2000g and is gas damped to provide a wide frequency response. The accelerometer is temperature compensated to provide a stable output over the operating environment.

dimensions

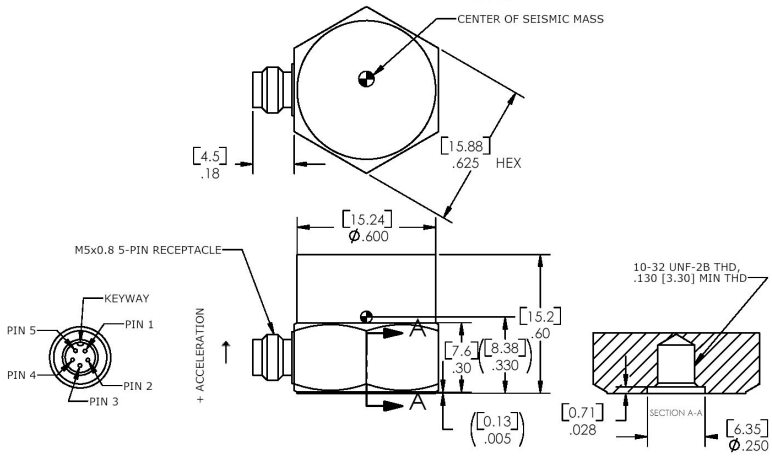

FEATURES

- ±2g to ±2000g Dynamic Range
- 10,000g Shock Protection
- Hermetically Sealed
- Gas Damping
- mV Output
- DC Response
- Stud Mounting

APPLICATIONS

- Impact Testing
- Structural Testing
- Test and Instrumentation
- Environmental Testing
- Vehicle Testing

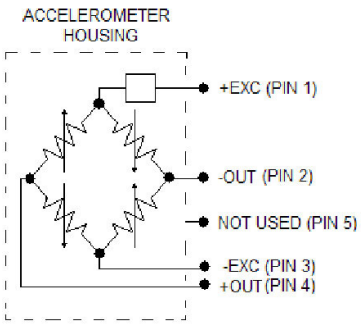

32 Journey Ste. 150 Aliso Viejo, CA 92656 949-716-5377 enduser@meas-spec.com

Supporting your great ideas www.pewatron.com PEWATRON a member of the Angst + Pfister Group

measurement SPECIALTIES

Model 3801A Accelerometer

performance specifications

All values are typical at +24°C, 100Hz and 10Vdc excitation unless otherwise stated. Measurement Specialties reserves the right to update and change these specifications without notice.

Parameters									Notes
DYNAMIC									
Range (g)	±2	±10	±20	±50	±100	±200	±500	±2000	
Sensitivity (mV/g)	12	6	3	1.5	0.7	0.7	0.3	0.1	@10Vdc Excitation
Frequency Response (Hz)	0-100	0-300	0-400	0-800	0-1300	0-1500	0-2500	0-4000	±5%
Natural Frequency (Hz)	700	1000	1500	4000	6000	7000	8000	10000	
Non-Linearity (%FSO)	±0.5	±0.5	±0.5	±0.5	±0.5	±0.5	±1.0	±1.0	
Transverse Sensitivity (%)	<3	<3	<3	<3	<3	<3	<3	<3	
Damping Ratio	0.7	0.7	0.7	0.7	0.7	0.6	0.5	0.3	
Shock Limit (g)	10000	10000	10000	10000	10000	10000	10000	10000	
ELECTRICAL									
Zero Acceleration Output (mV)	±25	±25	±25	±25	±25	±25	±25	±25	Differential
Excitation Voltage (Vdc)	5 to 10	5 to 10	5 to 10	5 to 10	5 to 10	5 to 10	5 to 10	5 to 10	
Input Resistance (kΩ)	4 to 10	4 to 10	4 to 10	4 to 10	4 to 10	4 to 10	4 to 10	4 to 10	
Output Resistance (kΩ)	2.4 to 4.8	2.4 to 4.8	2.4 to 4.8	2.4 to 4.8	2.4 to 4.8	2.4 to 4.8	2.4 to 4.8	2.4 to 4.8	
Insulation Resistance (MΩ)	>100	>100	>100	>100	>100	>100	>100	>100	@100Vdc
Residual Noise (μV RMS)	10	10	10	10	10	10	10	10	Maximum
Ground Isolation	Isolated from Mounting Surface								
ENVIRONMENTAL									
Thermal Zero Shift (%FSO/°C)	±0.04	±0.04	±0.04	±0.04	±0.04	±0.04	±0.04	±0.04	
Thermal Sensitivity Shift (%/°C)	±0.05	±0.05	±0.05	±0.05	±0.05	±0.05	±0.05	±0.05	
Operating Temperature (°C)	-55 to +125								
Compensated Temperature (°C)	-20 to +85								
Storage Temperature (°C)	-55 to +125								
PHYSICAL									
Case Material	Stainless Steel								
Cable	Not applicable								
Weight (grams)	20								
Mounting	#10-32 to #10-32 Mounting Stud (included)								
Mounting Torque	18 lb-in (2.0 N-m)								
AWG	Not applicable								

Wiring color code: +Excitation = Pin 1; -Excitation = Pin 3; +Output = Pin 4; -Output = Pin 2 (Pin 5 is not used)

Supplied accessories: AC-D02298 — 10-32 to 10-32 mounting stud

Optional accessories:
- 340-XXX — Cable Assembly, #32 AWG, -54 to +121°C (XXX designates length in inches, 5ft standard)
- 343-XXX — Cable Assembly, #28 AWG, -40 to +85°C (XXX designates length in inches, 5ft standard)
- 101 — Three Channel DC Signal Conditioner Amplifier

The information in this sheet has been carefully reviewed and is believed to be accurate; however, no responsibility is assumed for inaccuracies. Furthermore, this information does not convey to the purchaser of such devices any license under the patent rights to the manufacturer. Measurement Specialties, Inc. reserves the right to make changes without further notice to any product herein. Measurement Specialties, Inc. makes no warranty, representation or guarantee regarding the suitability of its product for any particular purpose, nor does Measurement Specialties, Inc. assume any liability arising out of the application or use of any product or circuit and specifically disclaims any and all liability, including without limitation consequential or incidental damages. Typical parameters can and do vary in different applications. All operating parameters must be validated for each customer application by customer's technical experts. Measurement Specialties, Inc. does not convey any license under its patent rights nor the rights of others.

ordering info

PART NUMBERING Model Number+Range

3801A-GGGG
|
|_____Range (0100 is 100 g)

Example: 3801A-0100
Model 3801A, 100g

32 Journey Ste. 150 Aliso Viejo, CA 92656 949-716-5377 enduser@meas-spec.com

Supporting your great ideas www.pewatron.com PEWATRON a member of the Angst + Pfister Group

PEWATRON
a member of the Angst + Pfister Group

We are here for you. Addresses and Contacts

Sales Switzerland

Postcode 3000 – 9999
Liechtenstein

Matthias Rüegg
Ruhbergstrasse 32
CH-9230 Flawil

Phone + 41 44 877 35 18
Mobile + 41 76 491 66 66
Fax + 41 44 877 35 19

matthias.rueegg@pewatron.com

Postcode 1000 – 2999

Raffael Favaretto
Route d'Oron 124
CH-1673 Promasens

Phone + 41 44 877 35 22
Mobile + 41 76 444 63 14
Fax + 41 44 877 35 23

raffael.favaretto@pewatron.com

Sales Germany

Postcode 60000 – 79999

Dieter Hirthe
Mühlweg 23
D-71554 Weissach i.T.

Phone + 49 719 149 60 58
Mobile + 49 163 762 74 30
Fax + 49 719 193 31 88

dieter.hirthe@pewatron.com

Postcode 10000 – 59999
Postcode 80000 – 99999

Kurt Stritzelberger
Neumarkter Str. 86a
D-81673 Munich

Phone + 49 89 260 38 47
Mobile + 49 171 803 41 35
Fax + 49 89 43 10 91 91

kurt.stritzelberger@pewatron.com

Key Accounts
Aerospace and Defence

Claus Wübbena
Vogelkamp 26
D-26655 Westerstede

Phone + 49 4488 5204 614
Mobile + 49 173 9700 691
Fax + 49 4488 5204 616

claus.wuebbena@pewatron.com

Sales Austria

Kurt Stritzelberger
Neumarkter Str. 86a
D-81673 Munich

Phone + 49 89 260 38 47
Mobile + 49 17 18 03 41 35
Fax + 49 89 43 10 91 91

kurt.stritzelberger@pewatron.com

Sales Other Countries / Product Management

Sensors

Physical Sensors
Data Acquisition

Peter Felder
Phone + 41 44 877 35 05
peter.felder@pewatron.com

Geometrical Sensors

Eric Letsch
Phone + 41 44 877 35 14
eric.letsch@pewatron.com

Power Supplies

DC-DC Converters
Switching Power Supplies
DC-AC Inverters

Sebastiano Leggio
Phone + 41 44 877 35 06
sebastiano.leggio@pewatron.com

E-Components

Current Sensors
Man Machine Interface
Measurement Probes

Sebastiano Leggio
Phone + 41 44 877 35 06
sebastiano.leggio@pewatron.com

PEWATRON AG
Thurgauerstrasse 66
CH-8052 Zurich

Phone + 41 44 877 35 00
Fax + 41 44 877 35 25

www.pewatron.com
info@pewatron.com