SILICON SENSING®

CRS05
Angular Rate Sensor

A robust and affordable mass-produced gyroscope for automotive and commercial customers.

Angular rate sensors are used wherever rate of turn sensing is required without a fixed point of reference. The sensor will output a DC voltage proportional to the rate of turn and input voltage.

High performance motion sensing even under severe shock and vibration.

Whatever your application, the unique silicon ring technology, coupled with closed loop electronics, gives advanced and stable performance over time and temperature, overcoming the mount sensitivity problems experienced with simple beam or tuning fork based sensors.

Key Features

- Excellent performance over temperature
- Repeatable drift characteristic
- High shock and vibration operation
- Automotive approved part
- Low mass and small size
- High temperature operation
- Built in Test (BIT)

© Silicon Sensing is an Atlantic Inertial Systems, Sumitomo Precision Products joint venture company

CRS05
Angular Rate Sensor

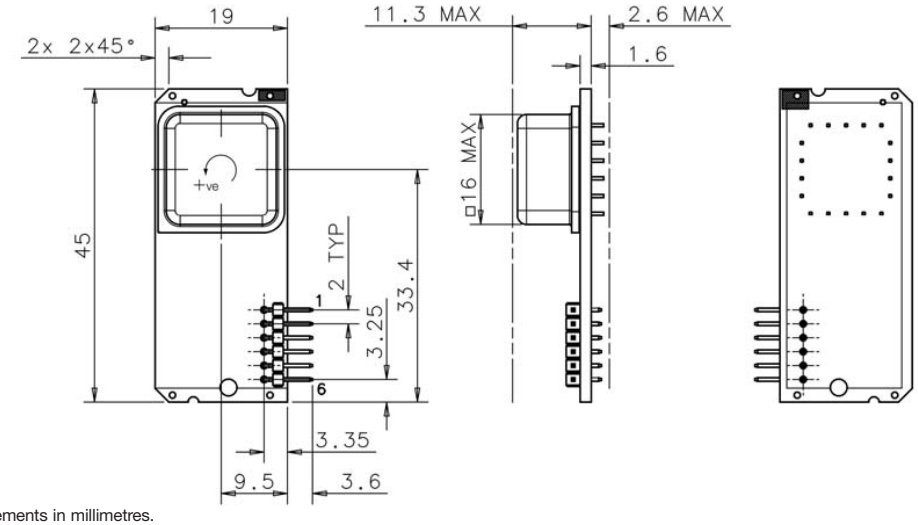

All measurements in millimetres.

Typical Data

Specification (Typical Data)	-01	-02	-75
Angular Rate Range	±50°/s	±200°/s	±75°/s
Output	Analogue voltage (ratiometric)		
Scale Factor			
Nominal	40mV/°/s	10mV/°/s	27mV/°/s
Variation over temperature range	< ±3%		
Nonlinearity	< ±1.0% of full scale		
Bias			
Setting tolerance	< ±1.5°/s		
Variation over temperature range	< ±3°/s		
Ratiometric error	< ±1°/s		
Drift vs. time	< ±0.5°/s (after start-up time)		
g sensitivity	< ±0.025°/s/g on any axis		
Bandwidth (−90° Phase)	80Hz	30Hz	40Hz
Quiescent Noise	< 85mV rms	< 4mV rms	< 8mV rms
Environment			
Temperature	−40°C to +100°C		
Linear acceleration	< 100g		
Shock	200g (1ms, ½ sine)		
Vibration	2g rms (20Hz to 2kHz, random)		
Cross-axis sensitivity	< 5%		
Mass	< 11 gram		
Electrical			
Supply voltage	+4.75V to +5.25V		
Supply current	< 35mA (running)		
Noise and ripple	<10mV rms (up to 10kHz)		
Start-up time	< 0.5s		
RoHS Compliant	No		

Pin Connections

1	Rate Output
2	+5V
3	CBIT
4	0V
5	BIT
6	N/C

Silicon Sensing Systems Limited
Clittaford Road Southway
Plymouth Devon
PL6 6DE United Kingdom

T: +44 (0)1752 723330
F: +44 (0)1752 723331
E: sales@siliconsensing.com
W: siliconsensing.com

Silicon Sensing Systems Japan Limited
1-10 Fuso-Cho
Amagasaki
Hyogo 6600891 Japan

T: +81 (0)6 6489 5868
F: +81 (0)6 6489 5919
E: sssj@spp.co.jp
W: siliconsensing.com

Specification subject to change without notice.

© Copyright 2009
Silicon Sensing Systems Limited
All rights reserved.
Printed in England 02/09

Silicon Sensing Systems Limited Registered in England & Wales No. 3635234 Clittaford Road, Southway, Plymouth, Devon PL6 6DE
The device mark Silicon Sensing is a registered trade mark of Silicon Sensing Systems Community Trade Mark 003587664

CRS05-00-0100-131 Rev 1
DCR No. 616972

PEWATRON
a member of the Angst + Pfister Group

We are here for you. Addresses and Contacts

Sales Switzerland

Postcode 3000 – 9999
Liechtenstein

Matthias Rüegg
Ruhbergstrasse 32
CH-9230 Flawil

Phone + 41 44 877 35 18
Mobile + 41 76 491 66 66
Fax + 41 44 877 35 19

matthias.rueegg@pewatron.com

Postcode 1000 – 2999

Raffael Favaretto
Route d'Oron 124
CH-1673 Promasens

Phone + 41 44 877 35 22
Mobile + 41 76 444 63 14
Fax + 41 44 877 35 23

raffael.favaretto@pewatron.com

Sales Germany

Postcode 60000 – 79999

Dieter Hirthe
Mühlweg 23
D-71554 Weissach i.T.

Phone + 49 719 149 60 58
Mobile + 49 163 762 74 30
Fax + 49 719 193 31 88

dieter.hirthe@pewatron.com

Postcode 10000 – 59999
Postcode 80000 – 99999

Kurt Stritzelberger
Neumarkter Str. 86a
D-81673 Munich

Phone + 49 89 260 38 47
Mobile + 49 171 803 41 35
Fax + 49 89 43 10 91 91

kurt.stritzelberger@pewatron.com

Key Accounts
Aerospace and Defence

Claus Wübbena
Vogelkamp 26
D-26655 Westerstede

Phone + 49 4488 5204 614
Mobile + 49 173 9700 691
Fax + 49 4488 5204 616

claus.wuebbena@pewatron.com

Sales Austria

Kurt Stritzelberger
Neumarkter Str. 86a
D-81673 Munich

Phone + 49 89 260 38 47
Mobile + 49 17 18 03 41 35
Fax + 49 89 43 10 91 91

kurt.stritzelberger@pewatron.com

Sales Other Countries / Product Management

Sensors

Physical Sensors
Data Acquisition

Peter Felder
Phone + 41 44 877 35 05
peter.felder@pewatron.com

Geometrical Sensors

Eric Letsch
Phone + 41 44 877 35 14
eric.letsch@pewatron.com

Power Supplies

DC-DC Converters
Switching Power Supplies
DC-AC Inverters

Sebastiano Leggio
Phone + 41 44 877 35 06
sebastiano.leggio@pewatron.com

E-Components

Current Sensors
Man Machine Interface
Measurement Probes

Sebastiano Leggio
Phone + 41 44 877 35 06
sebastiano.leggio@pewatron.com

PEWATRON AG
Thurgauerstrasse 66
CH-8052 Zurich

Phone + 41 44 877 35 00
Fax + 41 44 877 35 25

www.pewatron.com
info@pewatron.com